LED Thermal Design Challenges: Tips and Techniques

Brian Witzen, Sharp Microelectronics of the Americas

The latest in LED lighting offers high luminous flux, efficiency, CRI, and reliability, suitable for most lighting applications, including architectural, accent, HID, and down lighting. LEDs save energy, reduce waste, are free of mercury and lead, and convert energy to light more efficiently than common light sources used today.

The majority of LED failures are caused by excessive or long-term high temperature. Elevated junction temperatures can cause a reduction in light output, degradation of chromaticity performance, life expectancy, and reliability. In this article, we will discuss methods to predict the scale of the thermal challenges a design represents, along with ways to ensure the performance of the LED light engine. Included is a review of the basic heat transfer modes, guidelines for heat sink design, the LED thermal model, example calculations, and other considerations that must be taken into account.

There are three basic modes of heat transfer: conduction, convection, and radiation. Conduction is the transfer of heat by direct contact of particles of matter. Metals are generally the best conductors of thermal energy due to a large amount of free-moving electrons that are able to transfer thermal energy rapidly. Air is a poor conductor of heat, and eliminating air gaps between materials, even at the microscopic level, can drastically improve the efficiency of the conduction heat transfer. Using a thin layer of a thermal compound will help improve the conduction heat transfer from the LED to the heat sink. Convection is the transfer of thermal energy by the movement of molecules from one part of the material to another. As the fluid or air motion increases, the convective heat transfer increases. Radiation is the transfer of heat energy through empty space. No medium is necessary, since it is transferred via far infrared electromagnetic waves.

In LED heat sink design, each heat transfer mode plays a role in transferring heat away from the LED junction to the ambient environment. We will focus on the convection mode of heat transfer. In most LED designs, the majority of the heat is transferred from the LED package to the ambient air using convection. A realistic expectation of the air temperature surrounding the device needs to be considered, including the heat generated by the driver source if it is contained in the same space.

The material used should have a high thermal conductivity for best heat transfer. Typically, aluminum is used due to its relatively low cost and good thermal conductivity. Convection transfer takes place at the surface of the heat sink. Therefore, heat sinks should be designed to have a large surface area. More surface area can be obtained by using fins, increasing the size of the heat sink itself, or changing the heat sink’s orientation.

Heat transfer via radiation is greatly affected by the emissivity of the surface material. Emissivity is the ability of a surface to emit energy by radiation. In general, the duller and blacker a material is, the closer its emissivity is to perfect (the number one). The more reflective a material is, typically the lower its emissivity. Painting or anodizing the surface can have a dramatic affect on getting the heat out.

The thermal model used in selecting a heat sink is similar to those used in basic electronics. The heat source, temperature, and thermal resistance are similar to power dissipated, voltage, and resistance, respectively. A single LED thermal model diagram is shown below:

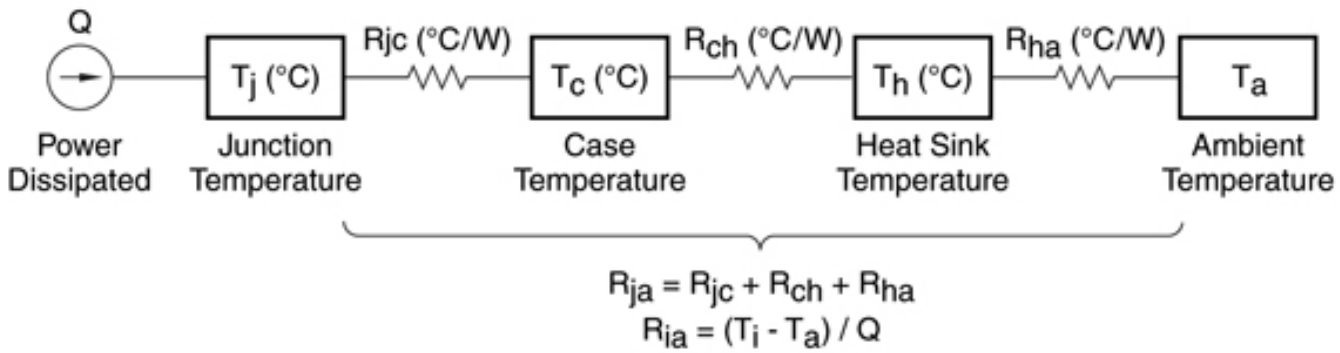

Using multiple LEDs on the same heat sink is a similar model to parallel resistors:

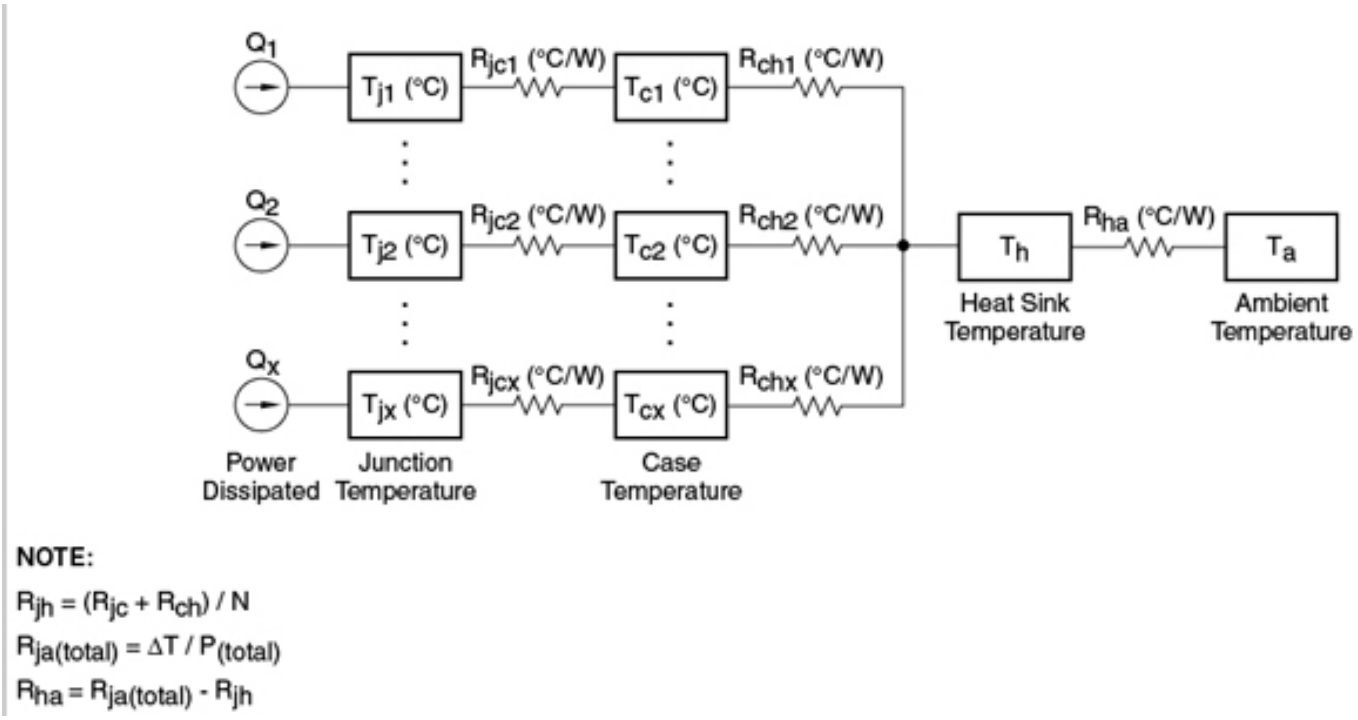

These thermal models assume the use of a LED module, similar to the Sharp Zenigata family of devices, which connect directly to the heat sink. When using LEDs that are mounted to a PCB, the thermal resistance and temperature of the PCB would be inserted in the previous diagrams and equations.

As a design example, we will do a thermal design for the Sharp GW5BTF30K00 Mini Zenigata LED module. The GW5BTF30K00 will operate at 6.5 W when driven at 640 mA. Since the Mini Zenigata specification already takes into account the maximum junction temperature, we can do our calculations starting with the case temperature. According to the specification sheet, the maximum case temperature is 80°C when used at 640 mA. A maximum ambient air temperature of 40°C will be assumed for this example. The design will rely on natural convection and will not use forced air. The thermal model is shown below.

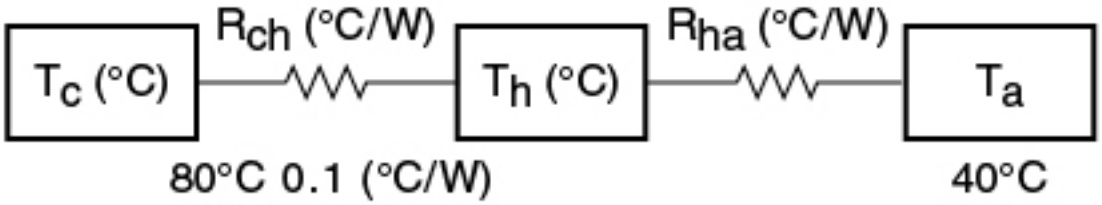

Assuming we use a thermal paste that has a resistivity of 0.1 °C/W, we can calculate the maximum heat sink temperature. Solving Th = Tc – (Rch x Watts), gives us a maximum heat sink temp (Th) of 79.35°C. We can now calculate the maximum thermal resistance required for the heat sink. Solving Rha = (Th – Ta) / W, gives us 6.03°C/W.

Knowing the maximum thermal resistance, we can start our heat sink search with various manufacturers. The performance graphs provided by the manufacturer can be used to verify the temperature rise of the heat sink.

Other considerations that affect the heat sink design are orientation, length, width, airflow, spreading resistance, and altitude. The orientation of the heat sink, especially when using fins, can have a large effect on the thermal transfer to the surrounding air by convection. Orienting the heat sink so there is no blockage of the natural or forced airflow will allow for the maximum convection heat transfer. In many LED designs, the heat sink is placed at the top of the luminaire. While this may be required due to mechanical reasons, it is not the most efficient use of natural convection. Without a forced air source, the natural airflow does not cross the heat sink. Additionally, since the bottom of the heat sink is not in contact with the cooler air, it is not contributing much to the overall cooling of the LEDs.

If constrictions limit the size of the heat sink or the optimal design is not possible, then forced air may be needed. Forced air, by the means of fans or blowers, allows for a way to reduce Rha and increase the heat sink’s effectiveness. The less effective the heat sink is to convection heat transfer, the more you need to utilize the available conduction and radiation heat transfer. Reducing the materials emissivity is an important factor in increasing radiation emission. Increasing the volume of the heat sink can improve its conduction performance by moving the heat further from the source.

When the heat source, the LED in this case, is significantly smaller than the base area of the heat sink, there is another thermal resistance we have not addressed.

Spreading resistance is caused when the source is smaller than the base and can increase the thermal resistance of the heat sink by 5 percent to 30 percent.

The altitude effect also needs to be considered. Air pressure changes with the altitude and it is necessary to de-rate the heat-sink performance due to the lower air density caused by the lower air pressure at higher altitudes. A good estimate is to de-rate the performance by 10 percent for every 5000 feet of elevation above sea level.

We have examined many techniques to consider when designing a LED heat sink. The goal is to get the heat out of the LED to obtain the best performance and minimize the risk of damage and degradation. The final heat sink depends on many physical and environmental variables. Without the use of advanced design tools, designing a heat sink is a trial-and-error process. Using the techniques discussed in this article will provide a good starting point for a successful design.

References

Sharp, “GW5BTF30K00 specifications”, DG-099009, Oct. 30, 2009
Sharp SMA, “Zenigata LEDs”, March 2009
Seri Lee, “How to select a heat sink”, Aavid Thermalloy
Seri Lee, Seaho Song, Van Au and Kevin P. Moran “Constriction/Spreading resistance model for electronics packaging", ASME/JSME Thermal Engineering Conference: Volume 4 ASME 1995
Harry Lythall, “Heatsinks”, www.sm0vpo.com [1]
The Engineering ToolBox, “Thermodynamics, The effects of work, heat and energy on a system”, www.engineeringtoolbox.com/thermodynamics-t_36.html [2]

Source URL (retrieved on *12/12/2013 - 1:37am*):
http://www.ecnmag.com/articles/2010/08/led-thermal-design-challenges-tips-and-techniques?qt-video_of_the_day=0

Links:
[1] http://www.sm0vpo.com
[2] http://www.engineeringtoolbox.com/thermodynamics-t_36.html