New Generations of 32-bit and 8-bit MCUs Ideal for Efficient Household Appliances and White Goods

Sandhya Mallikarjun, Fujitsu Microelectronics America, Inc

The newest generation of household appliances and white goods includes more electronics than ever, enabled by innovation and integration in 32-bit microcontrollers (MCUs) along with advances in the always-reliable low-end 8-bit controllers. The latest MCUs integrate sophisticated features and capabilities that allow designers and manufacturers to meet complicated design objectives -- conserving energy, minimizing power requirements, and reducing operating costs.

Some of the fastest-growing applications for 32-bit MCUs and Low Pin Count (LPC) 8-bit MCUs are in household appliances such as air conditioners, washing machines, refrigerators, and products for the kitchen, such as rice cookers and small ovens. Increasingly complex applications are fueling demand for more processing capability and greater memory capacity, capabilities that can be met by 32-bit MCUs. Let’s start by looking at the newest high-performance 32-bit versions, which integrate a wide range of features.

With the dual emphasis on conserving energy and on developing appliances that operate more quietly, the 32-bit microcontroller has emerged as an excellent design choice, specifically for driving compressors and motors in these kinds of products as shown in Figure 1. They offer the optimal combination of vector drive, application control, high-speed processing, and high-speed A/D conversion, and these highly integrated 32-bit MCUs provide many benefits. One example is the Fujitsu MB91490 family of devices.

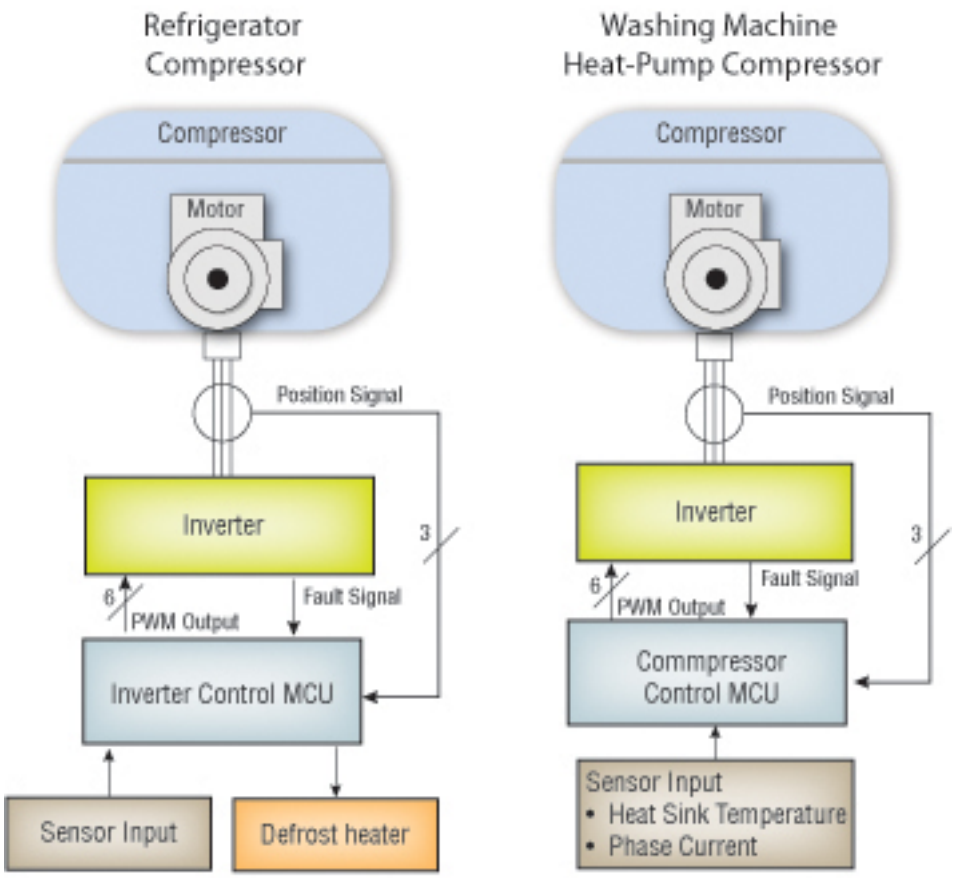

Figure 1: Refrigerator and washing machine compressors

Using precise 12-bit or higher resolution A/D converters in these embedded applications enable them to be sensitive to and react to very small changes. Also, the MCUs provide very fast speeds, enabling rapid response times as low as 15 nanoseconds. Integrated A/D converters synchronized with flexibly configurable pulse-width modulation timers provide smooth, accurate control, and achieve the reduced power requirements and lower operating costs required in high volume applications.

There is also a growing demand now for highly precise temperature control in microwave ovens and induction-heating cooking surfaces. That means the controllers must have the ability to process data from multiple sensors in real time and to provide fine-grained control.

For motor control, these 32-bit devices can assign independent free-run timers that allow the generation of carrier frequencies by different timers for individual phases in three-phase inverter control. DC inverter control is an important function that enables appliances to operate on optimized power and torque for quieter operation. MCUs also embed a dedicated waveform generator and multifunction timers generating not just trapezoidal waveforms but also two complementary sets of three sinusoidal PWM outputs, using edged patterns and single/double update-centered pattern with automatic dead time insertion feature. Examples of household products using inverters are air conditioning units, washing machines

and refrigerators, among others. Figure 2 illustrates a 32-bit MCU in an air conditioning unit.

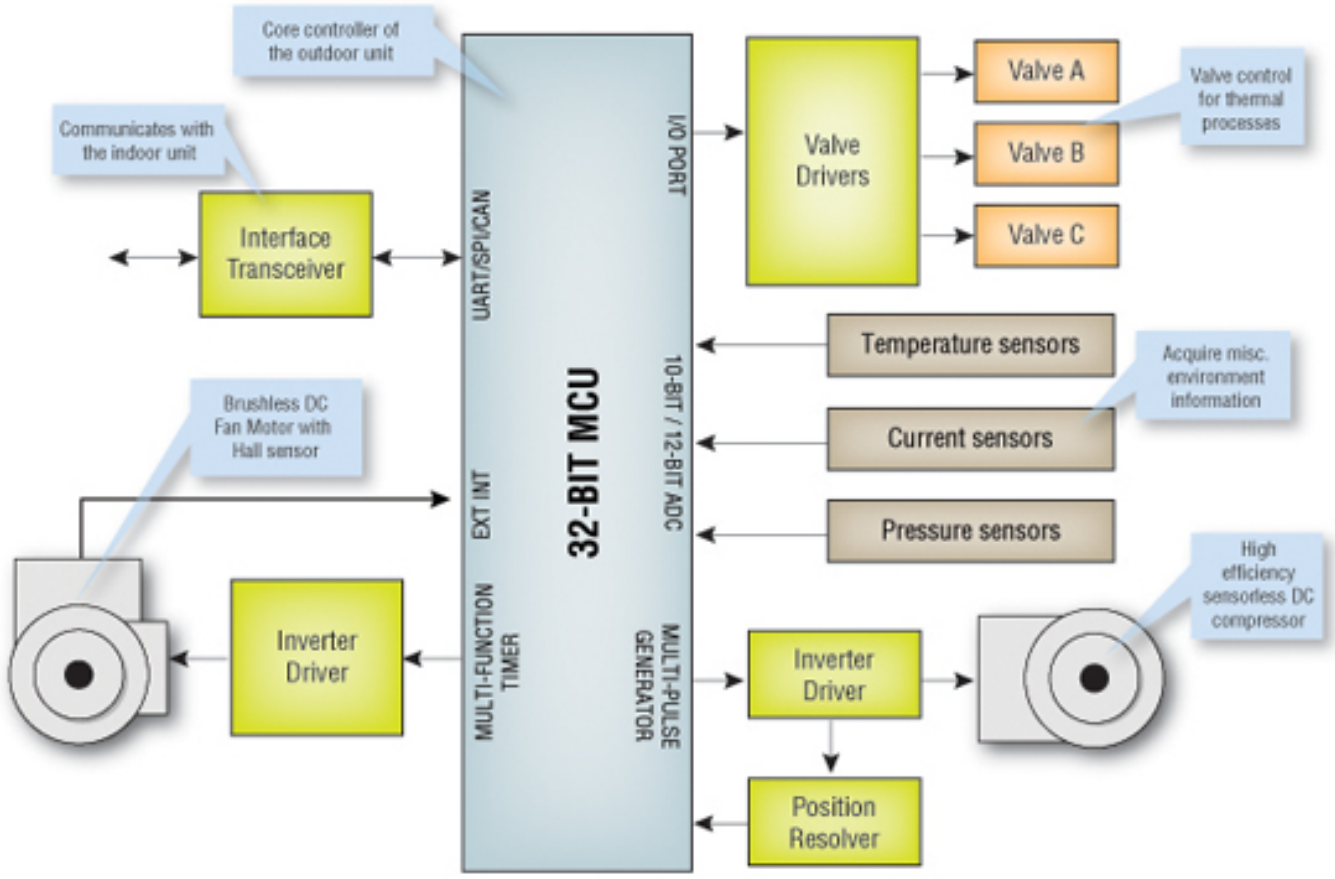

Figure 2: Air conditioning application example

Another key feature is on-board memory, which has become a significant requirement of the new generation of 32-bit MCUs. Many provide up to 512 Kbytes or 1 Mbyte of embedded flash and at least 32 Kbytes of RAM, an important feature for appliances like air conditioners that require significant amounts of memory for program and data storage of boot loader, mathematical computations, and motor control algorithms.

Due to improved semiconductor process technology, MCU designs are now very tolerant of external noise and generate little or no EMI noise. They also conform to IEC noise standards, including high transient-burst test (IEE6100-4-4) –even in single-sided board applications.

These controllers often include standard wired and wireless network communication interfaces on board with industry-standard connectivity through embedded IEEE802.15.4-compliant 2.4 GHz RF transceiver for ZigBee® RF4CE, Ethernet physical layer (PHY), CAN or USB controller (supporting host and device) functions. These interfaces enable system-to-system communications; for instance, with an on-chip USB, there is no need for a host interface, which is a differentiating feature for high-end appliances.

Other important features to look for in these advanced MCUs are:

• Very good real time responsiveness (low interrupt latency)
• Pure processing capabilities (such as single cycle multiply or HW divide)
• Excellent performance of about 1 DMIPS/MHz for control (for conditional branch and non-sequential execution flow)
• A good instruction set

Also, commands should be enhanced and streamlined to make them appropriate for different embedded applications such as memory-memory transfer, peripheral resource control, and bit management. Immediate data commands should also be available along with memory-access and embedded programming instructions.

This combination of features and command capabilities provides high object efficiency and reduces the number of external memory access operations and cache hits, which minimizes the total CPU load and optimizes core and cache efficiency.

Another goal enabled by these MCUs is reducing development time, which allows manufacturers to move products to market faster and more efficiently. Integrated hardware watchdog timer, hardware CRC, low voltage detect reset, and clock supervisor are some examples of enhanced fail safe-features that safeguard the system against fault operation and improve product reliability.

Along with hardware enhanced features, the following software capabilities also simplify the design process:

• Software support for a self test library to satisfy safety requirements of IEC60730 –class B or UL1998 standard
• Real-time operating system
• An array of algorithms and drivers with source code that meet MISRA (Motor Industry Software Reliability Association) coding standards that can be tailored to the design quickly and easily

Another added advantage that shortens the overall development process is having a software tool that simplifies the complex and difficult motor-tuning process by automatically measuring motor parameters, generating control parameters, and enabling users to rapidly build a motor control system or quickly evaluate and test characteristics of a prototype motor.

Many of these 32-bit devices also now incorporate high-speed product-sum macros or hardware accelerators that are able to operate in parallel with a central processor. These versions can execute product-sum operations in a single cycle at speeds of 50 MHz or better, so they can be applied in image-processing applications for filtering or fast Fourier transforms thus providing a single chip solution for both integrated motor control and appliance user interface controls.

Low Pin Count (LPC) MCUs Also Provide Value in Household Products
The 32-bit MCU is not the only design choice for new kinds of white goods. There

are several reasons why low pin count 8-bit MCUs are also workable in many household product and white goods designs, including the very low power requirements and minimal footprint required. As with 32-bit versions, these applications can benefit from the dramatically improved feature sets and performance of low pin count MCUs in water heaters, electric pots, de-humidifiers and hair dryers.

Household appliances like air conditioners, washing machines, refrigerators and consumer electronic products like TVs are driving growth for 8-bit MCUs, especially in Asian markets. These LPC MCUs provide many ways to manage power consumption so that applications consume no more power than necessary. For functions that must remain active, conserving battery life is another strong advantage, since many new 8-bit Flash devices consume only nanoWatts of current and offer several types of low-power modes that require different levels of current.

For example, consider the refrigerator. Since it is always on, it consumes a large amount of the home energy budget. Virtually all that electricity is used to run the compressor motor and most refrigerators still use constant-speed on/off compressors. Figure 3 illustrates other 8-bit application examples.

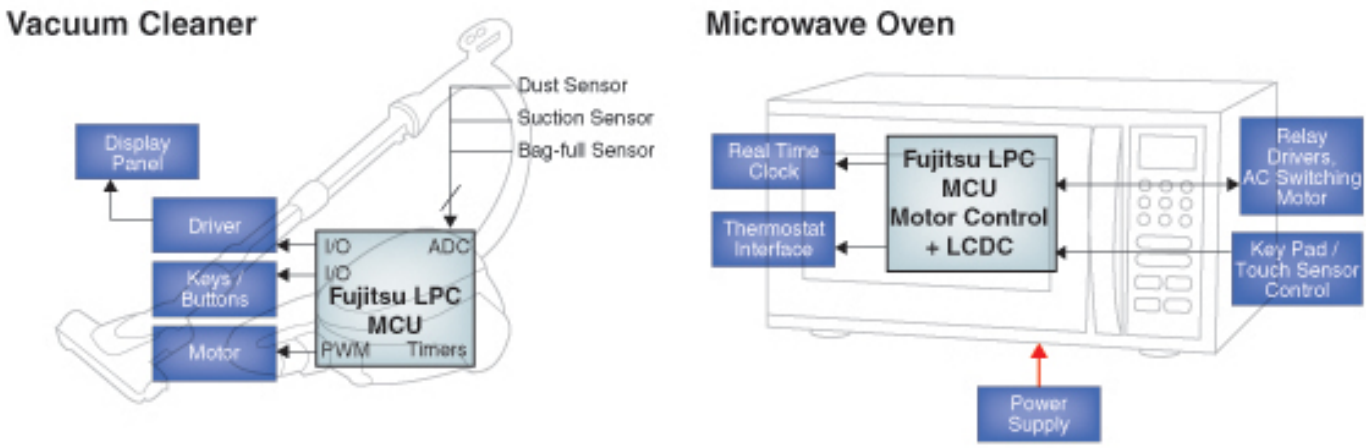

Figure 3: Low-pin-count application examples

There also is a cost benefit: compared with 32-bit devices, 8-bit MCUs offer significant cost savings for the most price-sensitive brown goods, with some devices available for as little as 20 cents each in high volumes.
To make the best choice in 8-bit MCUs, the designer should look for an intelligent combination of on-chip peripherals. Designers also should seek controllers that are scalable and flexible enough for different applications within an appliance, such as motor control, LCD controller for display, and external touch sensor controller interfaces using SPI/I2C for the human-machine interface (HMI) working at wide voltage range of 1.8V to 5V. One example of such a LPC MCU is the Fujitsu MB95330 family.

To save space and total BOM cost, MCUs also should incorporate embedded dual-

operation Flash memory for emulating E2PROM. The memory in the latest 8-bit MCUs contains two regions, one for program storage and another that can be used for data storage, acting as a substitute for E2PROM.

These features provide designers with a wide range of choices for household product development, from highly integrated 32-bit MCUs with a full set of capabilities, to streamlined low pin count 8-bit versions, enabling designers to meet new requirements for energy conservation, cost, and efficient operation.

The increasing complexity of applications, device aggregation to reduce overall costs, and the rise of the connected microcontroller all continue to drive the appliance markets to higher performance 32-bit devices. However the emergence in the industry for platform consolidation, driven primarily by the need to improve code, reuse and reduce costs, is taking these high performance devices in a direction that competes directly against the improved, highly integrated 8-bit devices.

Sandhya Mallikarjun is a Senior Staff Applications Engineer working with the Embedded Systems Solutions Group at Fujitsu Microelectronics America. She has more than nine years experience with the company working on design and development of embedded systems.

Source URL (retrieved on *07/22/2014 - 10:49pm*):
http://www.ecnmag.com/articles/2010/04/new-generations-32-bit-and-8-bit-mcus-ideal-efficient-household-appliances-and-white-goods?qt-recent_content=0