MIMO Over-the-Air: Facing the Challenges of Testing Wireless MIMO Devices

Jukka-Pekka Nuutinen, EB, Elektrobit, www.elektrobit.com

There seems to be no end to the demand of higher data rate applications and performance requirements as the number of new mobile devices continues to increase dramatically. The usage of mobile devices has evolved from voice only to multimedia messaging, downloading emails, web browsing, online gaming, video calls, social networking etc. To overcome the increased end-user performance requirements, new multi antenna mobile devices are being developed utilizing the recent advances in Multiple-Input Multiple-Output (MIMO) technique. However, MIMO technique not only opens up new opportunities, but also poses new testing challenges. The conventional way of testing the antenna characteristics and the signal processing performance separately does not assess the MIMO device performance realistically. As the MIMO terminal performance is a combination of antenna characteristics, radio propagation conditions, RF, baseband hardware, and software, they need to be tested together in a controlled environment by a MIMO Over-the-Air (OTA) test system.

Understanding the challenge
One of the main challenges in developing MIMO mobile devices is how to integrate multiple antennas into a mobile device. Using MIMO increases the spectral efficiency, i.e. it reuses the same frequency through uncorrelated channels. This can be simplified as two major issues: 1) the radio channel models must contain the spatial domain and 2) the correlation defines the MIMO efficiency. The correlation and spatial domain propagation are both antenna dependent. In practice, this means that if the propagation media do not have appropriate correlation properties - no matter how clever the MIMO algorithm is - the MIMO performance is ruined, and the antenna’s design, especially mutual coupling or leakage from the antenna branches, greatly affects the correlation properties. This means that the antenna effects, in addition to spatial domain propagation, need to be taken into account in the testing.

Testing of antenna effects is crucial when evaluating the performance of a MIMO terminal. Conventional conductive testing using RF connectors separates the antenna testing from the overall RF characteristics of the mobile devices, which leads to unrealistic results, increases testing time and decreases testing reliability significantly. In addition, the test connectors and cables affect the RF performance. These shortcomings lead to a need of a wireless test system called MIMO Over-the-Air (OTA). MIMO OTA is the only way to fully evaluate the true mobile device performance (i.e., the end-user experience of the final product).

MIMO Over-the-Air Testing
The MIMO OTA method is meant for testing MIMO devices, without a need to break the mobile device case, and the testing is done in a wireless manner without cables

(i.e. over-the-air). MIMO OTA testing enables the use of true, end user equipment as the device-under-test (DUT), giving full understanding of the performance of the DUT and enabling comparison of DUTs in equal conditions. The effect of antennas to performance is taken into account as they are integrated, including all possible antenna impairments due the design and manufacturing, which can affect the final product's efficiency.

The main components of a MIMO OTA test system (Figure 1) are the test transmitter (e.g. communication tester or base station emulator), channel emulator with MIMO OTA channel modeling tool, anechoic chamber, OTA antennas and the device under test (DUT). The DUT is typically a relatively small device.

The spatial domain propagation is generated by the radio channel emulator and radiated by the antennas into the anechoic chamber. Even though the number of antennas is limited to the number of the available channels, the MIMO OTA test system is able to generate any kind of angular behavior into the chamber. This is achieved by clever weighting of the signals in the radio channel emulator. The consequence of this angular propagation behavior and antenna design is the correlation. Since the model has to be realistic, it has to be based on the observations, thus physical measurements. Therefore, only Geometry Based Stochastic Models, such as SCM, SCME, WINNER or IMT-A models are applicable.

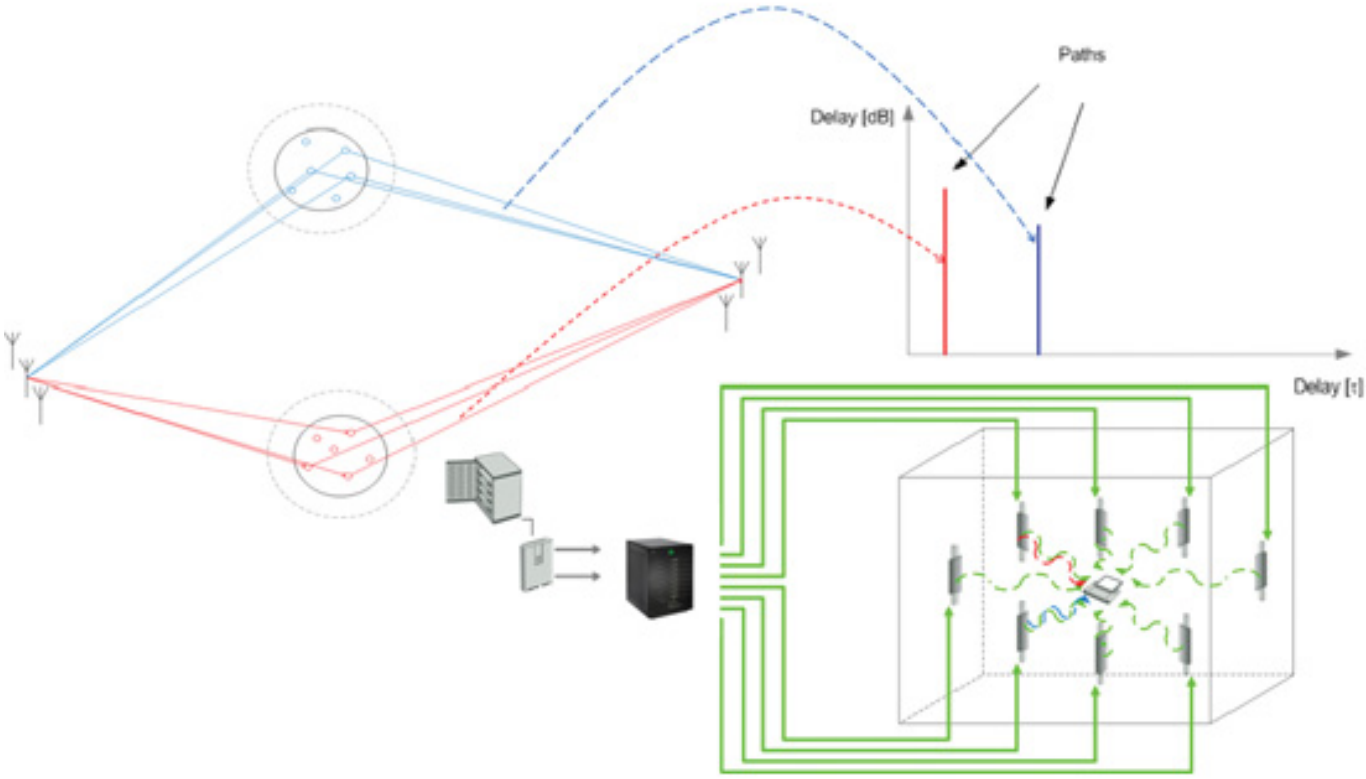

Figure 1. The geometrical models can be mapped to the MIMO OTA test system.

Practical Example

A test scenario was created to demonstrate the performance of off-the-shelf MIMO

devices. The MIMO device under test was a Linksys IEEE 802.11n device with 2x2 MIMO, and it was operated in the 2.4 GHz band using 20 MHz channel bandwidth. The device is a commercially available off-the-shelf device, illustrating that the test system can be used also with final products to compare various devices under identical radio channel conditions. Another matching device from the same product family was used as the test equipment making up the other side of the link outside the chamber to ensure compatibility with all modes of MIMO operation of the DUT. The radio channel emulator used in the test was the EB Propsim F8 MIMO OTA emulator. The “downlink” signal from the tester to the DUT was routed through the channel emulator and then through eight ~30 dB gain amplifiers to a circular array of eight vertically polarized broadband measurement antennas. The “uplink” from the DUT was captured using a circularly polarized antenna and fed through circulators and isolators to couple the signal back to the tester side of the link, without providing an alternate downlink signal path. The DUT was placed on an azimuth positioning turntable in the center of the test volume. A laptop was located nearby to serve as the client side for performing throughput measurements between the tester and the DUT. Figure 2 depicts the experimental test set-up.

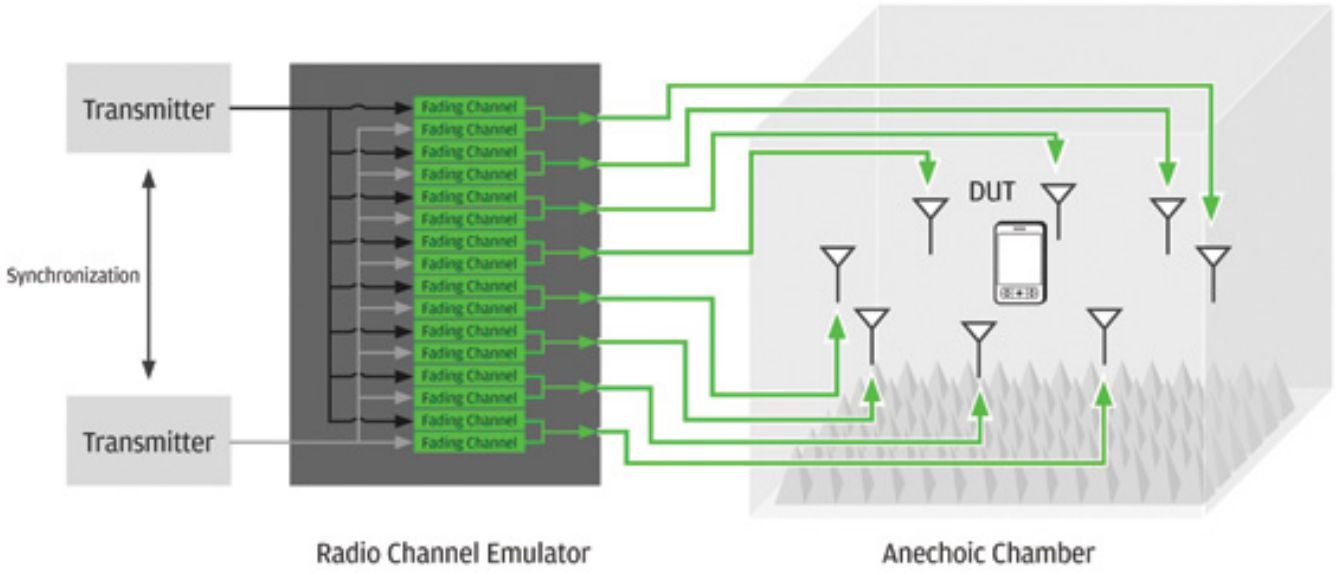

Figure 3 depicts the throughput versus attenuation (intervening path loss) results as a function of rotating the DUT on the turntable in 30-degree increments using the modified SCM Urban micro model. The goal is to evaluate the effect of altering the relative antenna orientation within the simulated environment for the selected channel model. From Figure 3 we can see that the antenna orientation affects greatly to the available throughput.

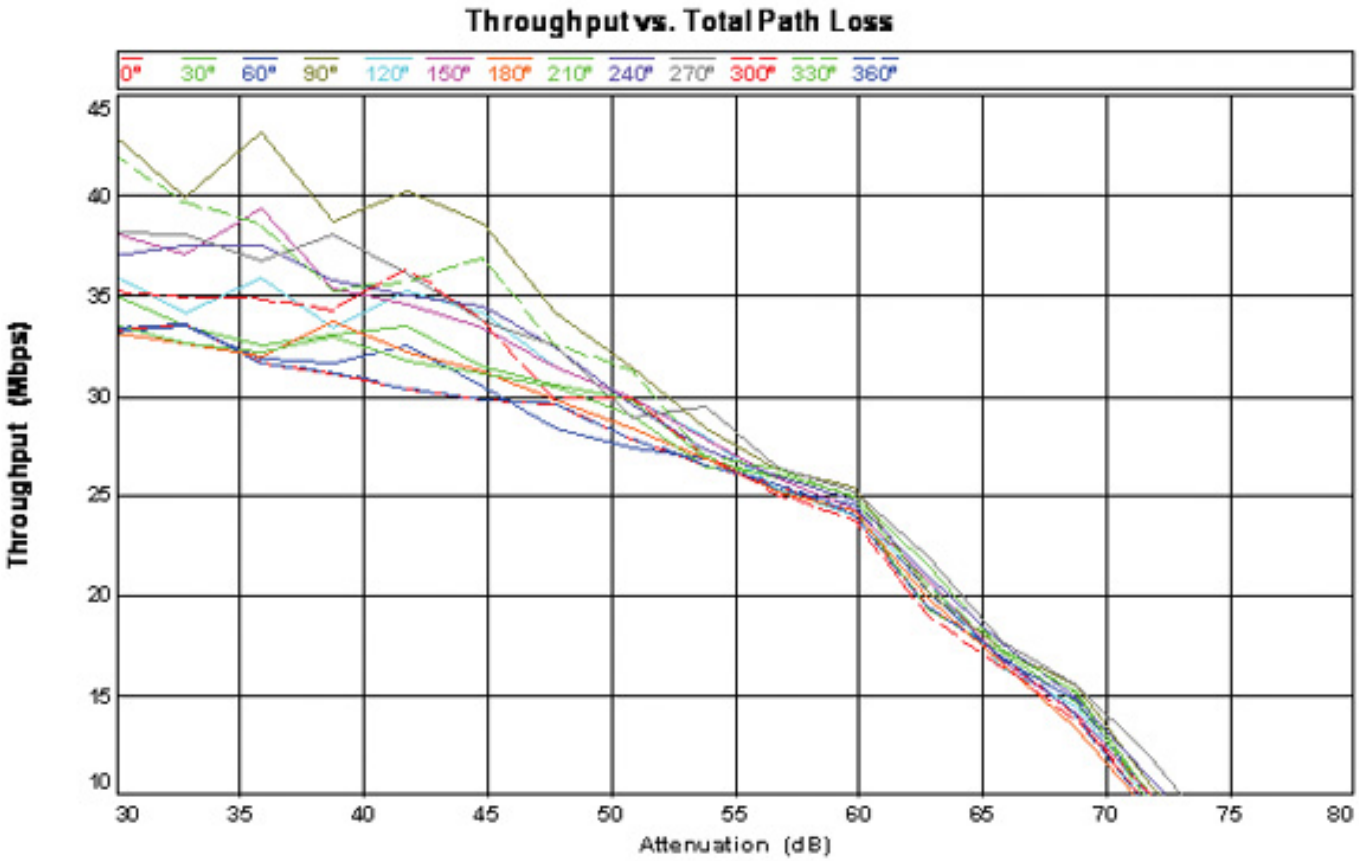

Figure 3. Throughput versus Attenuation azimuth cut for the modified SCM Urban Micro model.

Conclusions

The MIMO performance is dependent on antenna orientation, thus angular information plays extremely important role when assessing the MIMO performance. The key to this angular behavior is Geometry Based Stochastic Models and clever mapping used in the EB Propsim F8 MIMO OTA emulator.

Based on the above presented practical example and numerous measurement results contributed to standardization forums such as 3GPP, COST2100 and CTIA, the benefits of the MIMO OTA test system are clear. The MIMO OTA test system is capable of repeating MIMO performance in the laboratory conditions; therefore it reduces the number of required field tests and shortens the development time.

Jukka-Pekka Nuutinen is senior specialist, Wireless Communications Tools at EB, Elektrobit. Mr. Nuutinen holds a Lic. Tech. degree from Tampere University of Technology and has 20 years experience in research and development. His research interests include radio propagation, MIMO technologies and wireless telecommunication systems. Mr. Nuutinen has several publications listed in IEEE and he holds several patents on wireless telecommunication sector. For more information, contact EB, Elektrobit, Tutkijantie 8, FIN-90590 Oulu, Finland; +358 40 344 2000; www.elektrobit.com [1].

1. M. D. Foegelle ” Over-the-air performance testing of wireless devices with

multiple antennas", RF Design, Feb 2006, pp. 44 – 52.
2. http://www.elektrobit.com/what_we_deliver/wireless_communications_tools/list_of_publications/order_eb_propsim_mimo_ota_white_paper [2]
3. http://www.cost2100.org/ [3]
4. 3GPP, RAN4, MIMO OTA Working group

Source URL (retrieved on *05/20/2013 - 12:08am*):
http://www.ecnmag.com/articles/2010/04/mimo-over-air-facing-challenges-testing-wireless-mimo-devices

Links:
[1] http://www.elektrobit.com
[2] http://www.elektrobit.com/what_we_deliver/wireless_communications_tools/list_of_publications/order_eb_propsim_mimo_ota_white_paper
[3] http://www.cost2100.org/