Build HMI Into Home Appliances with Capacitive Sensing and a Lot More

Meng He, Cypress Semiconductor

The arrival of the iPhone on June 29, 2007 did not just win Apple an overwhelming presence in the personal gadget world, but also changed consumers' perception of human machine interface forever. The user-driven human touch sensing design is not just intimate with its customers; it is loved. The current generation of consumers is not satisfied with the same old mechanical buttons, knobs, and switches any more, but expects all of its electronics and appliances to adopt the sleek and robust touch sensing control/displays that are easy and fun to use.

Consider the number of buttons and switches in the laundry room and kitchen: 4 on the dryer, 5 on the washer, 12 on the microwave, 5 on the coffee machine, and so on. The latest trend of user-driven Human Machine Interfaces (HMI) is not just to introduce capacitive sensing buttons and sliders into the picture but to also support more intuitive interfaces using LCD displays as well as enable more intelligent sensing functions so that machines can respond to human motions.

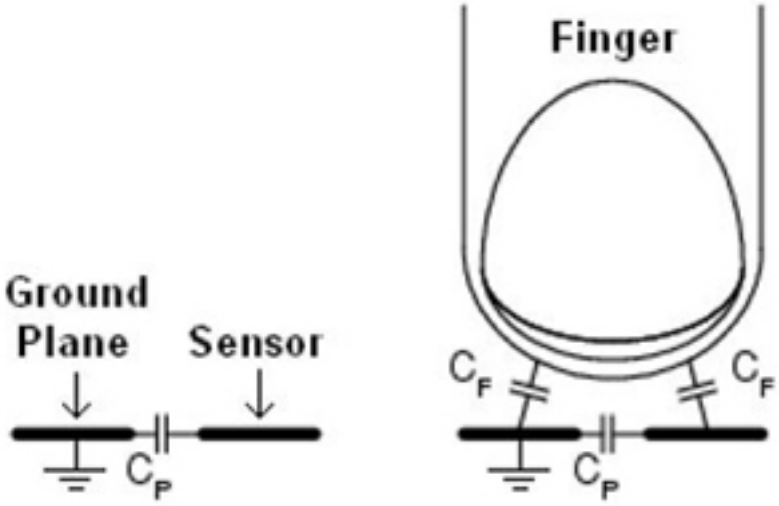

Capacitive Sensing

What is capacitive sensing? At the heart of any capacitive-sensing system is a set of conductors which interact with electric fields. The tissue of the human body is filled

with conductive electrolytes covered by a layer of skin that acts as a lossy dielectric. It is the conductive property of fingers that makes capacitive touch sensing possible. Placing a finger near fringing electric fields adds a conductive surface area to the capacitive system. The additional charge storage capacity added by the finger is known as finger capacitance, CF. The capacitance of the sensor without a finger present is denoted as CP, which stands for parasitic capacitance [1]. The user interface control unit detects the presence of a figure by processing the capacitance fluctuation data (see Fig 1).

Figure 2 shows an example of a Capacitive Sigma-Delta (CSD) sensing algorithm that utilizes a switch capacitor, a counter, and a PWM block to determine the presence of a finger on a capacitive sensor. This algorithm uses the switched capacitor circuitry to convert the capacitance into a voltage which is compared to a reference voltage. When the capacitor voltage reaches the reference voltage, the comparator triggers a bleed resistor which discharges the capacitor. When the capacitor voltage declines below the reference voltage, the bleed resistor is left floating to allow the capacitor to continue charging. The comparator output, which continually toggles the bleed resistor, is a bit stream which fluctuates as the sensor capacitance changes. The bit stream is ANDed with a PWM to provide consistent framing of the stream. The number of counts in each frame is then analyzed to determine if the capacitive sensor is being triggered.

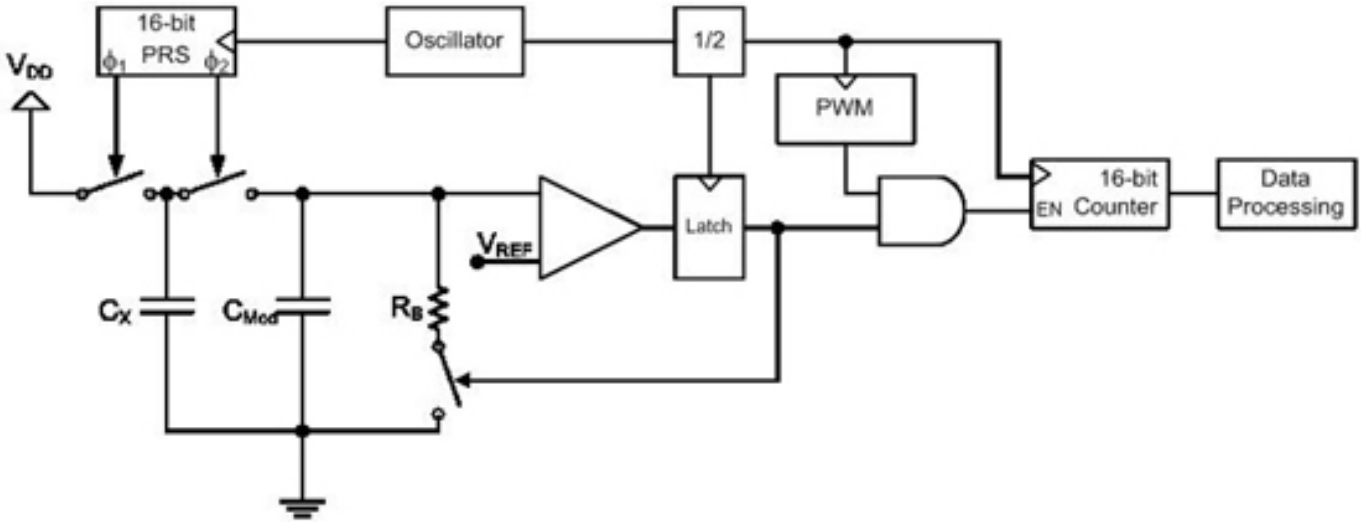

Integrating Direct Drive and Intelligent Sensing

Home appliances, however, tend to have tight cost constraints. A capacitive sensing implementation has to not only increase value but also potentially reduce cost. This is achieved through integration that exploits the similarity between applications using capacitive sensing to reduce component count and simplify manufacturing.

For example, segment LCD glass is commonly used in the front panel of appliances, and the typical implementation is to design-in a discrete LCD driver beside the IC controlling capacitive sensing. Given the common use of an LCD with capacitive sensing, direct drive by the capacitive sensing IC – i.e., driving the LCD glass by providing signals to the “raw” LCD to turn pixels on and off – reduces system cost and space by eliminating external resistors and capacitors. If the IC supports configurable LCD pin location, developers can also design shorter traces, fewer PCB

layers, and less crossovers.

Many home appliances also support a variety of sensors. Specifically, the added safety, energy efficiency, convenience, and value gained by using sensors has led them to be introduced to a wide range of products such as steam irons, coffee makers, kettles, toasters, rice cookers, bottle warmers, ice makers, waffle irons, and portable cookers. For example, a temperature sensor in washing machines allows precise control of water temperature, while a pressure sensor can be used to measure the level of water in the drum and a turbidity sensor can sense the soiling of the water.

Sensors are inherently analog in nature, and so there is at least one analog signal rail on the home appliance front panel board. These signals, however, may need to be amplified or attenuated, filtered, frequency shifted, etc. given the noise level of the operating environment. To condition these signals requires components such as programmable gain amplifiers (PGA), mux busses, mixers, comparators (CMP), and analog to digital convertors (ADC).

Integrating analog conditioning circuitry enables developers to move away from treating each of these features as a separate subsystem requiring its own distinct controller. Rather than have a central microcontroller, dedicated capacitive sensing processor, separate LCD interface, and components to condition sensors, the entire sensing and control subsystem can be implemented using a single controller with programmable analog elements (see Fig 3).

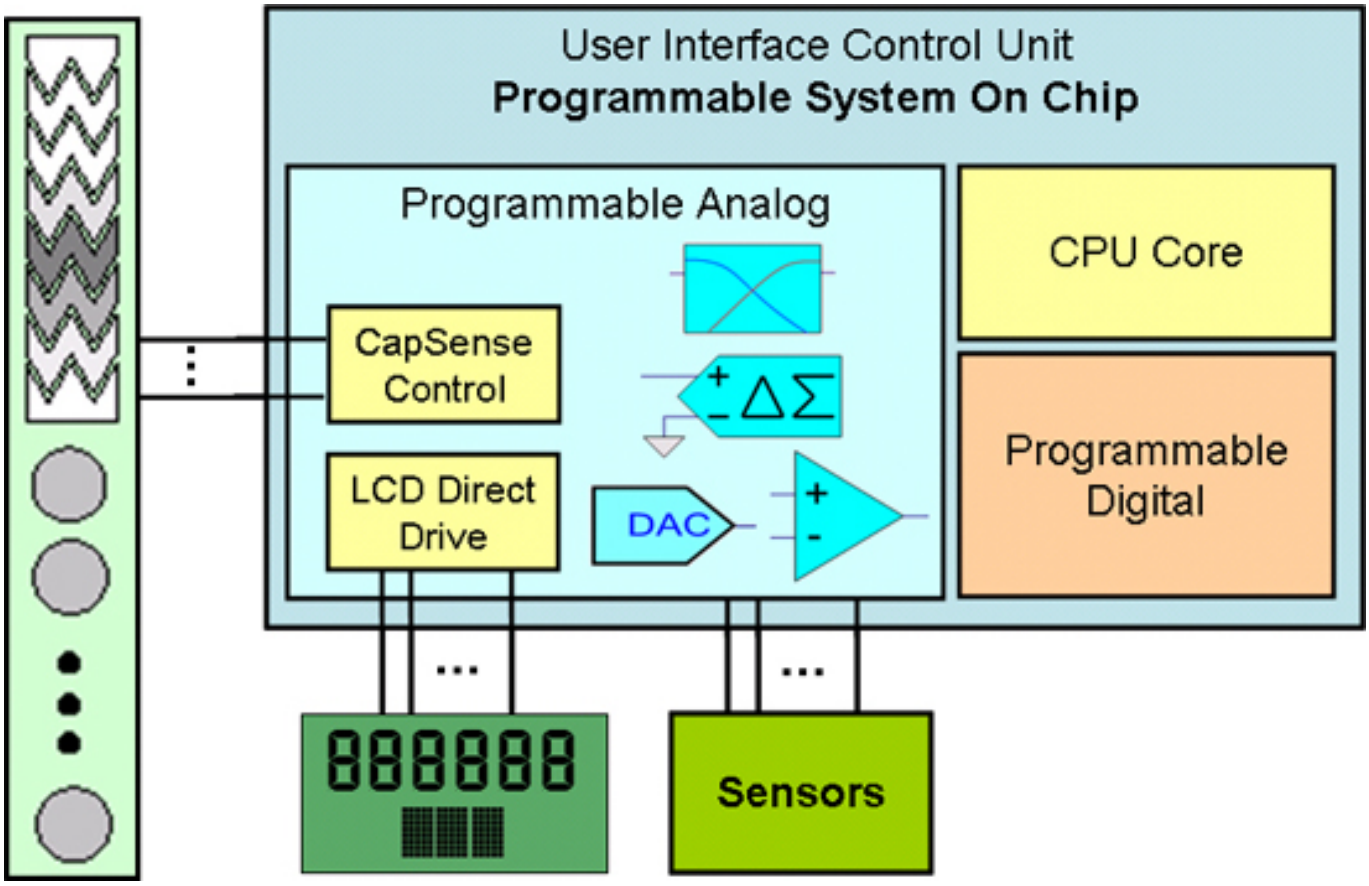

Consolidating common functionality onto a single chip enables developers to

introduce features such as capacitive sensing in home appliances while controlling cost and complexity. Programmability of the microcontroller ensures that the system is flexible enough to accommodate multiple interfaces and allow designers to focus on the application instead of the implementation. In addition, the system is open to future expansion of new features, new sensors, and new interfaces without requiring a complete redesign.

[1] “The art of capacitive touch sensing” By Mark Lee, Cypress Semiconductor Corp. Planet Analog [1]

Source URL (retrieved on *05/21/2013 - 12:16pm*):
http://www.ecnmag.com/articles/2010/04/build-hmi-home-appliances-capacitive-sensing-and-lot-more?qt-most_popular=0

Links:
[1] http://www.planetanalog.com/;jsessionid=1R51UQQTDT5LHQE1GHPSKHWATMY32JVN