Partial Networking: In-Vehicle Networks Can Reduce Costs and CO2 Emissions

Holger Huber, System Marketing Manager In-Vehicle-Networking, NXP Semiconductors

For the first time, a new method is enabling selected nodes of an in-vehicle network to be put into selective sleep mode, reducing current consumption from approximately 250mA to less than 50µA. The electronic control unit (ECU) remains integrated into the network and can be addressed at any time. Without changing the network and ECU architecture, cost reductions of approximately €6.97 can be achieved through the reduced carbondioxide emissions resulting from this approach. The good news is that the required components for CAN networks are readily available and that this method is applicable for FlexRay networks as well.

In the past, electronic control units (ECUs) in automotive applications were connected by individual signal wires. However, today, close to 100% of the ECUs are connected by bus systems such as LIN, CAN and FlexRay. This yields significant advantages, including improved data availability, straightforward wiring and standardized interfaces. On the other hand, all the control units connected to a bus must continuously monitor the traffic on the bus and respond immediately in case of any messages that are relevant for them. Thus, these control units cannot be put into a power-down mode.

Implementing power-down modes in complex bus systems (e.g. CAN or FlexRay) is difficult because every bus node must be active even if only one node is transmitting. Defining sub-networks or partial networks is currently not possible. If, for example, the door-control module in the driver’s door intends to communicate with the window lift of the rear right door, all other modules connected to the bus system, e.g. the roof module, the seat modules, etc. all have to be active, even though they are not involved and could remain in low-power mode.

There is an urgent need for a solution to this problem. In “partial networking mode,” only selected nodes of a network are active while the remaining nodes can enter a special low-power mode. In this “selective sleep mode,” the nodes will only respond

to specific, pre-defined wake-up messages. Fig. 1 illustrates such a network with control units in different modes of operation.

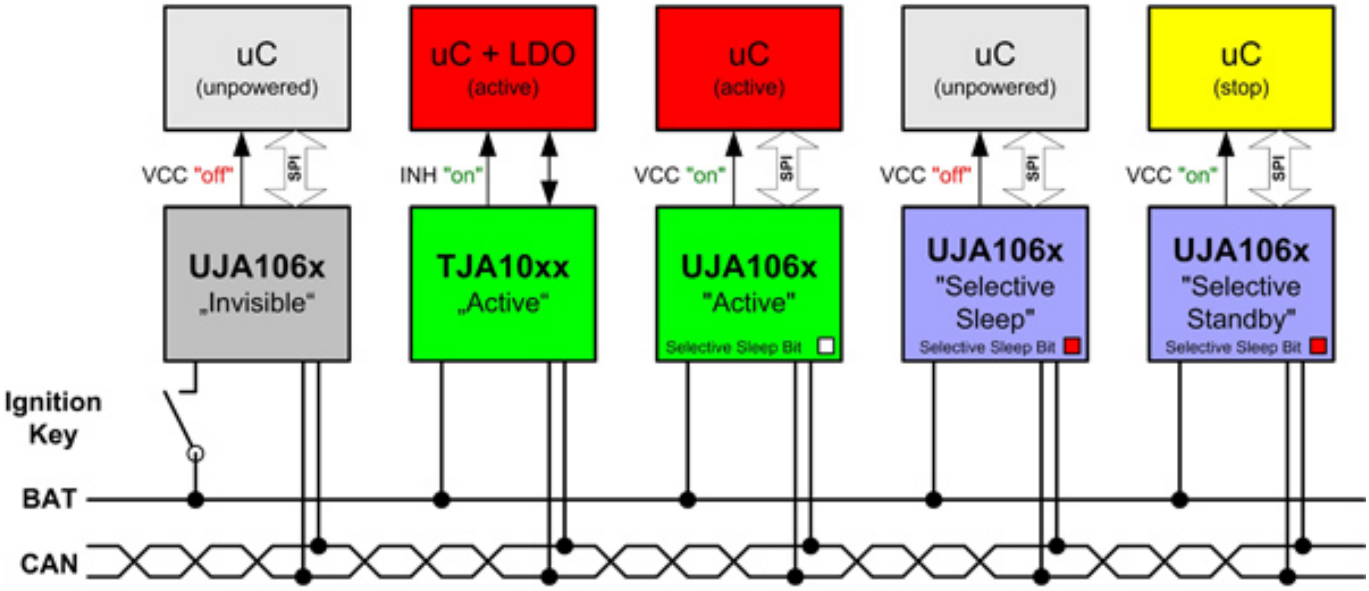

Fig. 1. This CAN network includes one ECU which is powered down ('invisible'), two permanently active ECUs ('active') and two ECUs operating in the selective sleep mode. In the selective sleep mode, the microcontroller can alternatively enter a stop mode, resulting in a 'selective standby mode'.

In order to make partial networking an environmental and commercial success, NXP has developed a low-cost method requiring only a slightly optimized transceiver or system basis chip. As the footprint of the components remains unchanged, no modifications to the architecture of the control unit are required and there is also no need for additional components (e.g. a crystal). Furthermore, this method is already available for CAN applications and can be applied to FlexRay networks in a similar fashion.

Reduced Carbondioxide Emissions in the Worldwide Political Focus
Governments in different regions of the world are calling for massive reductions of the emission of the greenhouse gas CO2. In the EU, buyers of new cars will be charged 95 EUR for each gram of CO2 exceeding the limit of 120g/km. In the U.S., President Barack Obama has announced the Fuel Economy Standard mandating a fuel efficiency standard of 35.5mpg (approx. 160g of CO2 per km) starting in 2016. In Japan, buyers of new cars can expect a bonus of up to US $530 if they choose an environmentally-friendly model with CO2 emissions of less than 118g/km.

Potential CO2 Reductions Lead to Potential Cost Reductions
The potential CO2 and cost reductions resulting from partial networking can be calculated by multiplying the number of nodes suitable for partial networking with the potential savings per node. Potential candidates for partial networking include seat control modules which are actively used only in very rare instances. Also, parking assistance systems will not be used at speeds above 20km/h, and even

door, mirror and roof control modules will rarely be used and can remain in selective sleep mode for the rest of the time. Additional examples can be found in the infotainment segment or in special accessories (e. g. trailer control units).

$$\text{Energy saved per ECU}: (14.4V - 3.3V) * (250mA - 50\mu A) = 2.77W$$

$$\text{Energy saved per vehicle}: 2.77\text{W} * 12\ \text{ECUs} = 33.24\ \text{W}$$

$$\text{CO2 saved per vehicle}: 33.24\text{W} * 0.0265\text{g}\frac{\text{CO2}}{\text{kmW}} = 0.88g\frac{CO2}{km}$$

$$\text{Cost reduction per vehicle}: 0.88\frac{\text{gCO2}}{\text{km}} * 95\frac{EUR}{\frac{gCO2}{km}} = 83.60EUR$$

$$\textit{Cost reduction per}\ \text{ECU}: \frac{83.60\ \text{EUR}}{12} = 6.97EUR$$

Equation 1: Potential CO2 and cost reductions for a vehicle with 12 network nodes put into a selective sleep mode

This yields tremendous potential for cost reductions. Equation 1 shows a calculation for a typical EU vehicle in which 12 network nodes may enter selective sleep mode. Assuming an ECU with an average current consumption of 250mA in active mode and 50µA in selective sleep mode, potential energy savings amount to 2.77W per ECU. This equates to 0.88g CO2 per km if there are 12 nodes. Multiplying this with the penalty tax of 95 EUR for each gram of CO2 intended for the EU starting in 2015, this results in an effective cost reduction of 83.60 EUR per vehicle or 6.97 EUR per network node.

Energy Savings Without Convenience or Performance Tradeoffs
These considerable savings can be achieved without affecting the driving experience: All vehicle functions will remain available at any time, and the pleasure of driving will not be degraded by any performance reductions in the powertrain.

The extremely low current drain in selective sleep mode may even allow the implementation of additional functions unavailable today. For instance, window lifts and the sun roof may remain operational even after removing the ignition key because the control units can be kept in an addressable state due to their current draw of less than 50µA in selective sleep mode.

In electric vehicles, partial networking will even increase driving range because the

costly, heavy Li-Ion batteries are not required to provide as much current for a given vehicle function. Thanks to the new partial-networking feature, only the active functions will draw current while the others can remain in selective sleep mode.

Technical Requirements

Minimizing current drain in selective sleep mode is the highest priority. Consequently, the amount of silicon active at any time must be minimized, precluding the use of complex solutions with a microcontroller that must remain operational or a CAN controller required to detect the CAN identifier. NXP has developed a method using an extremely small amount of logic for reliably detecting wake-up messages on the CAN bus. This solution is available in NXP's UJA106x system basis chip family which already enables a stand-by current of less than 200µA. For emerging transceivers and system basis chips, this can be further reduced to less than 50µA for the entire control unit.

No automotive OEM can replace all control units at once. Therefore, the selected method must allow for a step-by-step implementation in a vehicle platform by simultaneously supporting partial networking as well as the standard mode. OEMs can then develop a phased implementation approach. While simple units including seat, door, roof and driver-assistance modules can be replaced in an initial step, more complex modules featuring increased network integration can be upgraded to partial networking in a later stage.

Some prerequisites must be met for a phased, low-risk introduction:
• No modification of the existing network architecture required for adopting existing control units.
• The internal architecture of the control units must not be modified, so that no interfaces will be changed and existing hardware and software can be maintained.
• Established networking standards including CAN or FlexRay must not be violated.

As far as the fail-safe characteristics of the in-vehicle network are concerned, it is important to ensure that:
• EMC behavior complies with today's standards and proven EMC circuits remain unchanged.
• The physical characteristics of the bus do not change in the selective sleep mode in order to avoid any influences on the quality of the communication.
• All network nodes have equal privileges, i.e. each node must be able to wake up any other node.

The requirements outlined above are fulfilled by the system basis chip family UJA106x offered by NXP, which has been available for several years. These components are already "on the road" in many vehicles, offering an ideal platform for introducing partial networking as an essential contribution to reducing CO2 emissions and fuel consumption. Prototypes of the TJA1043pn stand-alone transceiver have also become available since October 2009. The TJA1043pn is the successor of the TJA1041, being the worldwide first standalone transceiver offering the partial networking feature. Furthermore, the approach is future-proof because it can be applied to new standards including FlexRay.

Source URL (retrieved on *06/19/2013 - 12:33pm*):
http://www.ecnmag.com/articles/2010/03/partial-networking-vehicle-networks-can-reduce-costs-and-co2-emissions?qt-recent_content=0