Designing an EMC-Compliant Automotive Switching Buck Regulator

John Rice and Sanmukh Patel, Texas Instruments

The automobile is changing and so, too, are the electronics that make them run. The most radical example is the plug-in electric vehicle (PEV) where a 300-400V Lithium-Ion (Li-Ion) battery replaces the gas tank, and a three-phase propulsion motor replaces the combustion engine. Sophisticated battery pack monitoring, regenerative braking systems, and complex transmission control attempt to optimize battery utilization and life, and extend range between charge cycles. A modern day car, electric or otherwise, has dozens of electronic modules to facilitate performance, safety, convenience and security. It is not uncommon to find mid-range cars with advanced global positioning systems (GPS), integrated DVD players, and high-performance audio systems.

With these advancements comes the need for greater processing speed. As such, today's automobiles incorporate high-performance microprocessors and DSPs requiring core voltages down to 1V, and currents upwards of 5A. Generating these voltages and currents from a car battery that can vary from 6V to 40V is fraught with challenges, not the least of which is satisfying strict standards for electromagnetic compatibility (EMC). The linear regulator, once the primary method for converting the car battery to a regulated source voltage, has run out of "steam." Or more accurately, it generates too much "steam" as output voltages drop and load currents increase. Instead, the switching regulator is seeing increased usage, and with a proliferation of switching regulators, comes an increased concern of electromagnetic interference (EMI) disturbing radios and safety critical systems.

This article investigates the basic considerations for successfully implementing a switching regulator, presenting it in an intuitive way without complex mathematics. The principle considerations we will investigate include: 1) slew-rate control, 2) filter design, 3) component selection, 4) layout, and 5) noise spreading and shielding.

SMPS EMC the easy way

The premise of this article is that it is not necessary to fully comprehend the complexities of EMI (which are highly complex) when attempting to design an EMI-compliant switching regulator. In fact, all of the problems associated with EMI are a result of not fully appreciating the rate at which voltages and currents change within a switching regulator, and their interaction with parasitic circuit elements on circuit board traces or within components themselves. Take, for example, a 200 kHz switching buck regulator operating from a nominal car battery of 14V and generating 5V at 5A. To achieve respectable efficiency, the voltage slew rate at the switch node should be a small fraction of the on-time, say one-twentieth or less. The on-time of a buck converter, operating in continuous conduction mode (CCM), is given by D/fsw where D is the duty-cycle, or percentage of time a pulse width

modulated (PWM) signal is on, to the total period (ton +toff), and fsw is the converter's switching frequency.

For a buck converter operating in CCM, the inductor current is always positive and non-zero. Under this condition a good approximation of the duty cycle is D=Vout/Vin, or in our case 38 percent (5V/14V). Using the switching frequency of 200 kHz we quickly calculate the on-time to be 1.8 µs. To support this frequency the rise/fall time of the control switch would have to be less than 90 ns. This brings us to our first noise mitigation awareness – slew rate control. You may not realize this, but at this point we have a very good idea of our harmonic content associated with the PWM switch node – the control waveform of a switching regulator. If we approximate this waveform as the trapezoidal shown in Figure 1a, the harmonic content of the waveform can be expressed as in Figure 1b, which represents the driving force behind EMI. This "Fourier Envelope" defines the harmonic content amplitudes that can be obtained via Fourier analysis, or more simply by calculating the on-time and rise-time of the trapezoidal waveform.

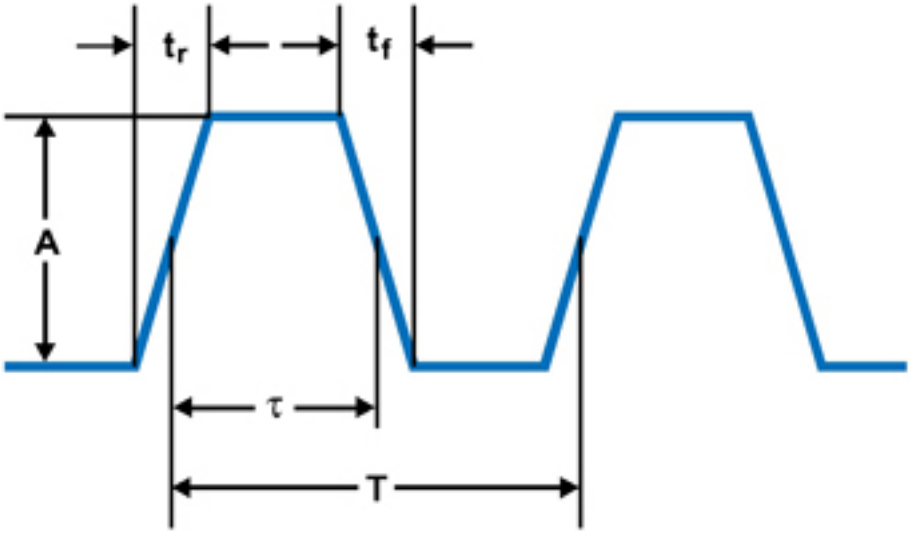

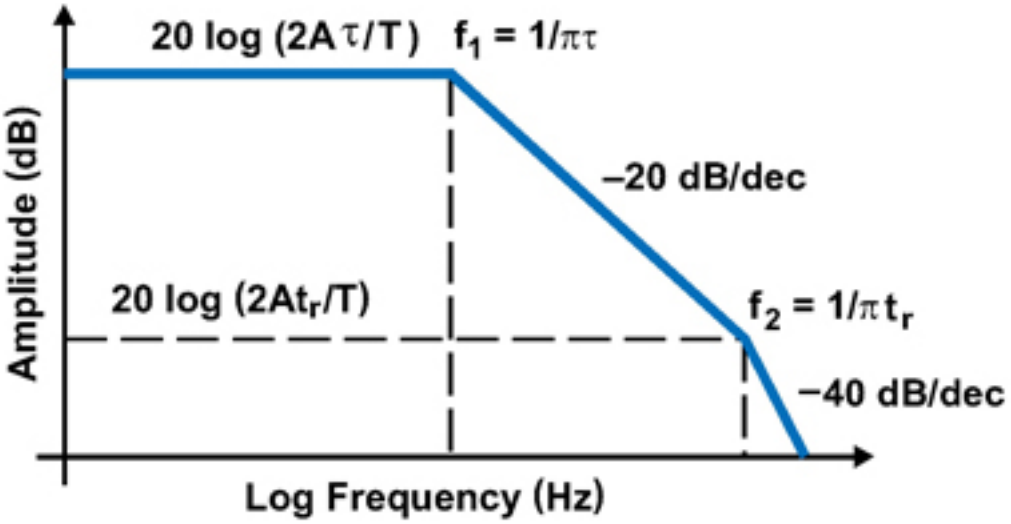

Figures 1a and 1b. Trapezoidal Waveform and Corresponding Fourier Envelope

When viewed in the frequency domain, a trapezoidal waveform with equal rise and fall times is composed of a set of discrete harmonic signals that exist at integer multiples of the periodic signal's fundamental frequency. Notice that the energy in each harmonic falls off at 20 dB/dec after the first break point at 1/(p × t), where t is the on-time and at 40 dB/dec after the second located at 1/(p × tr). Consequently, limiting the slew-rate of the switching waveforms can have a profound impact on reducing emissions. From this discussion it should be clear that operating at lower frequencies can also facilitate a reduction in emissions.

AM radio band considerations
One of the more challenging areas for automobile EMI compliance is associated with the AM band. This band starts at 500 kHz and continues to 2 MHz, pretty much the sweet spot for switching regulators. Since the highest energy component of a trapezoidal waveform is the fundamental (assuming no circuit board resonances) operating below or above the AM band is desirable.

Does duty cycle matter?
Another important consideration is that if the duty cycle is exactly 50 percent, all the energy of the complex trapezoidal switching waveforms is in the odd harmonics (1, 3, 5, 7…). Thus, operating at 50 percent duty cycle is typically a worst case condition. At duty cycles above or below 50 percent, a natural EMI spreading occurs as even harmonics are introduced.

EMI and EMC standards
You can think of EMI as misplaced energy, and it doesn't take much to violate emission standard. In fact, EMI is a very low-energy effect. For example, at 1 MHz it takes only 20 nW of EMI power to fail FCC conducted emissions. Conducted emissions are measured with a spectrum analyzer by monitoring the high-frequency components from the input source. A line impedance stabilization network (LISN) acts as a low impedance to the switching regulator, and a high-pass filter of line noise into the spectrum analyzer. As such, the input to our switching regulator is the next area of concern.

Conducted emissions can become radiated emissions: input filter considerations
One of the principle causes of EMI in an automobile is coincident with a switching regulator imposing AC currents on the supply harness. These changing currents express themselves as harmonically rich waveforms that radiate and conduct emissions. For example, in a non-isolated boost converter, the input capacitor (C2) and boost inductor (L1) shown in Figure 2a form a unidirectional EMI filter blocking emissions to the line. However, the input current has an AC triangular waveshape with the Fourier expansion of this waveform, shown in Figure 2b as the blue trace.

By simply adding L2 and C2, the waveform becomes more sinusoidal and the energy is re-distributed with significantly lower high-frequency peaks. The input

filter, however, if improperly designed, can actually amplify noise and destabilize the control loop. So understanding the concepts of input filter design are important in optimizing filter response and cost. Using the AC analysis of SPICE is an effective tool in comprehending the filter behavior. For a detailed discussion on EMC and filter design as it applies to switching regulators, see Unitrode Design Seminars [1] archived under “training” on the TI website.

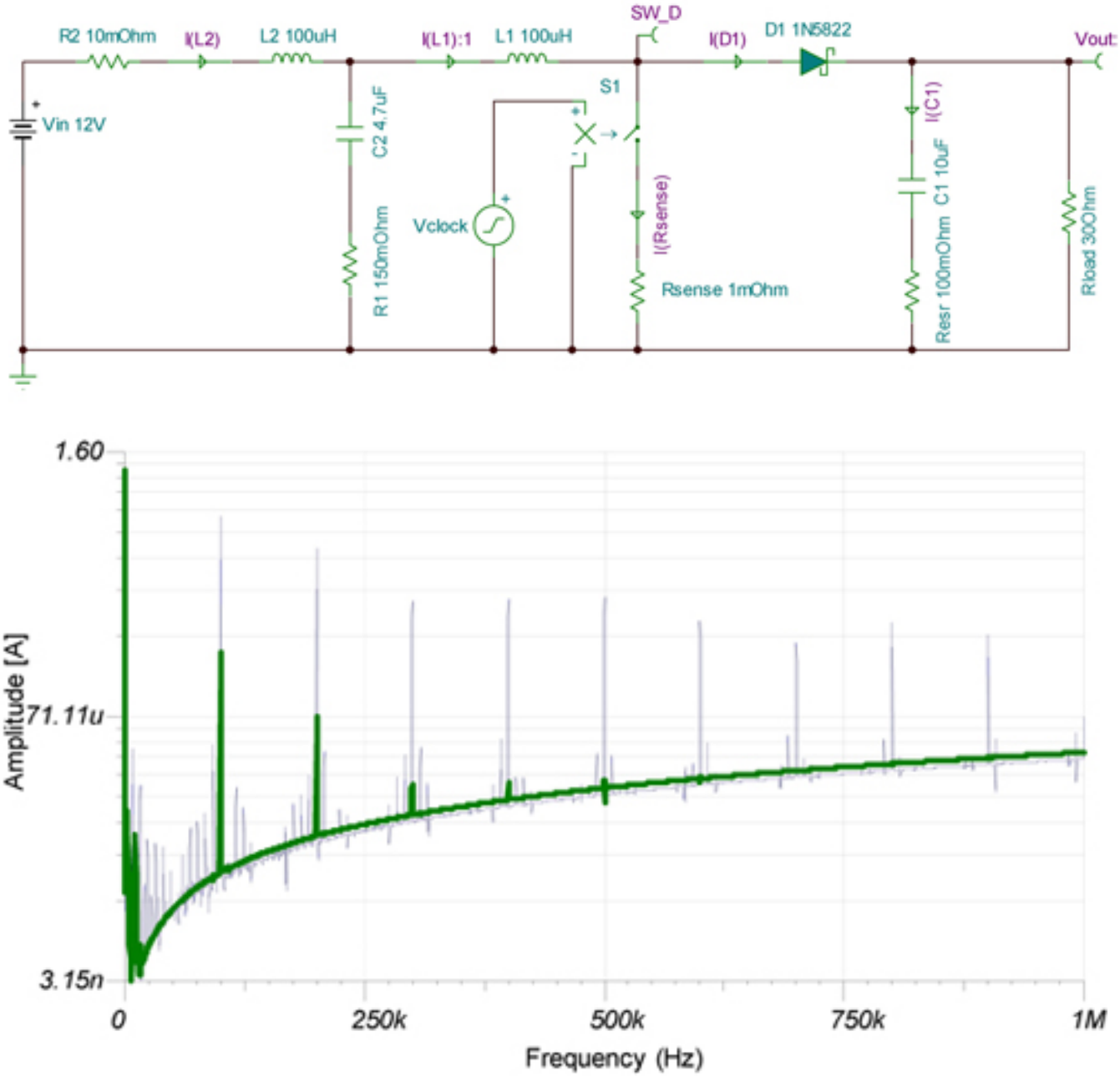

Figures 2a and 2b. Boost converter and line current Fourier expansion with and without an LC input filter

Whether you are designing a buck or boost supply, the “differential mode” filter or a bi-directional pi-filter can be your best friend by keeping EMI noise from getting onto the line and radiating, and/or conducting noise. Note that parasitic elements

associated with the filter components, including inter-winding terminal capacitance and capacitor ESR, can significantly affect attenuation of harmonic content and should be considered carefully.

Selecting the right components

Component selection is a critical part of designing an EMI-compliant switching regulator. For example, a shielded inductor helps to reduce stray leakage fields that can radiate and couple into mutual inductances and high-impedance circuits (like the input error amplifier of the PWM controller).

Diodes with soft or low-reverse recovery characteristics minimize high-current spikes associated with a diode going from a conducting state to a blocking state. These peak currents react with parasitic inductances to create ringing on the switching nodes that can exceed 100 MHz and wreak havoc in the EMC test chamber. Although beyond the scope of this paper, EMI can be aggravated by the improper selection of a switching regulator’s loop compensating components. If the power supply is not properly compensated, output ripple and instabilities will manifest themselves as increased noise. A properly compensated power supply is essential to achieve good noise performance.

Keep in mind the path that current flows

This brings us to the most easily controllable and necessary aspect of designing an EMI-compliant switching regulator – circuit trace routing and component placement. The latter dictates to a large degree the former. Earlier in this paper we described EMI as misplaced energy, and changing currents and voltages can couple themselves into susceptible circuits (say high impedance) via parasitic capacitances, mutual inductances or air. As such, the placement of our components and coincident path of harmonically rich currents is paramount in minimizing emissions at the source. For a detailed discussion on layout considerations, see Topic 4 of the SEM1600 TI Power Supply Seminar [2].

Fundamental to the proper layout of a power supply is minimizing loop area of high-current caring conductors. In doing this you minimize inductance that can act as an antenna source and radiate energy. One aspect of this is effectively placing the component and selecting the decoupling capacitor. Figure 3 illustrates the output power stage and filter of a synchronous buck converter. C3 decouples the power stage, providing a low-impedance source when Q2 turns on. To minimize radiated emissions, C3 must be connected as illustrated where the intrinsic impedances of the capacitor, circuit trace and interconnect via inductance are minimized. A high-quality capacitor dielectric with a high self-resonant frequency like X7R is also necessary.

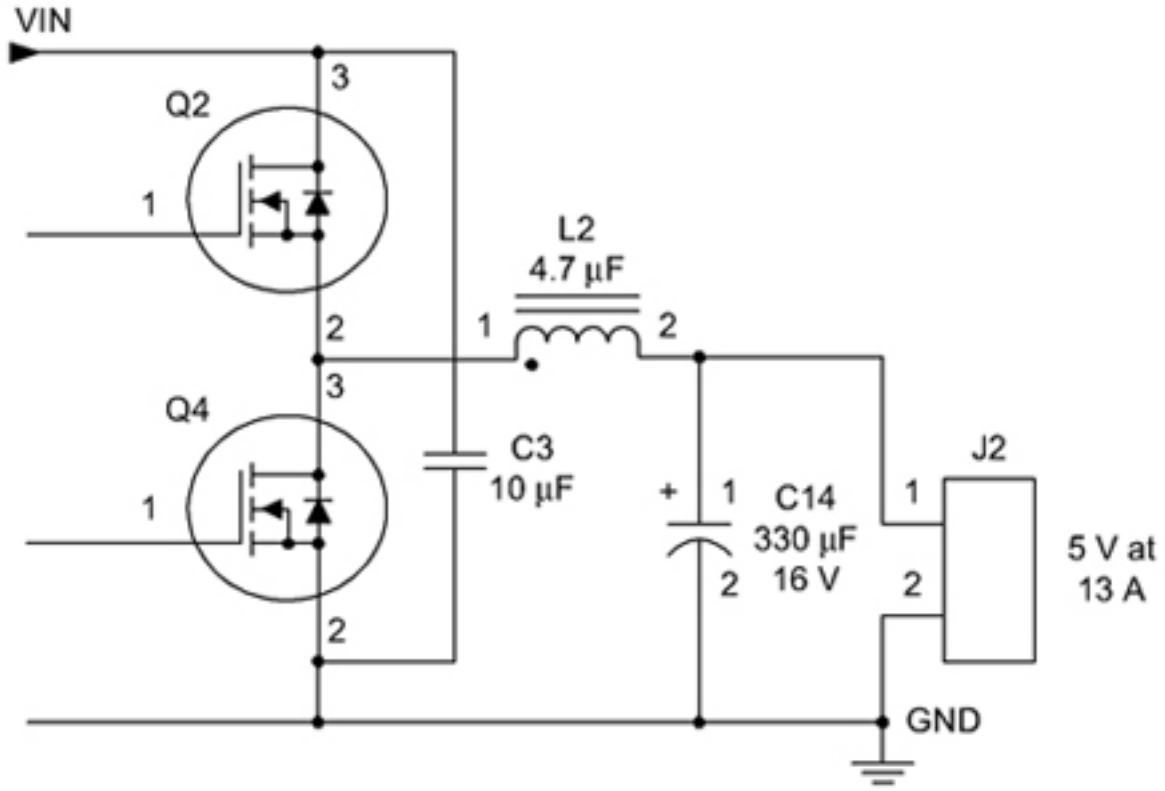

Figure 3. Decoupling of the power stage – minimize the loop area of C3

Shielding
The last techniques we will identify are noise shielding and noise spreading, which may be used to facilitate additional noise margin, but only after applying the well established techniques we have discussed thus far. If you are still failing EMC or if there is insufficient noise margin, external shields may be necessary to divert radiated electric field emissions before they make their way to the EMC receiver antenna.

An electric field is produced when switched voltages are present on surfaces such as heat sinks or magnetic cores, causing them to act as antennas. Electric fields usually can be shielded relatively easily by conductive enclosures, where the conductive material terminates the field by converting it to current. Of course, there must be a path for this current, which is normally ground. But this current merely contributes to overall conducted noise energy where it needs to be addressed with filters. External magnetic field shielding is more challenging (costly) and largely ineffective at higher frequencies. As such, leakage fields should be controlled by carefully designing the magnetics and circuit board loop areas (see the Unitrode Design Seminars).

When all else fails – spread the spectrum
Lastly, here is another technique that is seeing increased usage and can be effective in lowering peak harmonic energy by spreading it across a larger band of

frequency. Known as spread-spectrum frequency dithering (SSFD), this technique alters the noise spectrum by harmonic peak reduction changing the signature from “narrowband” to “broadband” noise. It’s important to understand that the energy spectrum changes, but the overall energy remains the same. An important consequence is that the noise-floor will generally increase, compromising high-fidelity systems. Figure 4 illustrates the harmonic spreading and peak reduction that occurs. The fundamental reduction is typically between 5–10 dB with subsequent harmonics having increased peak reduction. See TI’s 2008/09 Power Supply Seminar, Topic 3 [3] for a detailed discussion on spread-spectrum techniques and their effect in switching regulators.

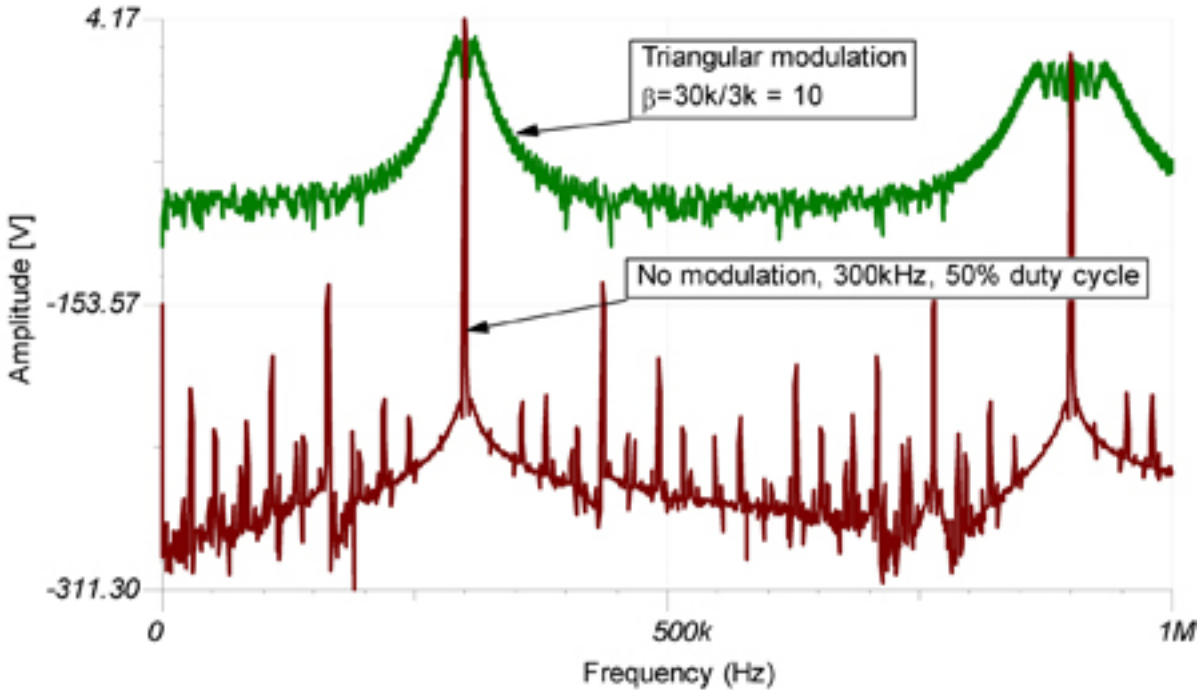

Figure 4. Harmonic peak reduction with spread-spectrum technique

Conclusion

You can spend a lifetime understanding the complexities of EMI, but designing an EMI-compliant switching regulator only requires comprehending the application circuit and a few fundamental circuit design properties and waveform analysis. Whether you are designing an automotive, off-battery switching regulator or complex PEV battery charger, designing an EMI-compliant switching regulator requires a conceptual appreciation for Maxwell’s equations. Fortunately for most of us, this does not involve partial differential equations. Rather, it involves an awareness of the magnetic and electric fields coincident with the quickly changing voltages/currents, and comprehending the techniques outlined in this article.

References

1. Unitrode Design Seminars, 1980 – 2003: http://www.ti.com/2003powerseminar-ca2 [1].
2. SEM1600 – TI Unitrode Design Seminar Series, Topic 4, 2004-5: http://www.ti.com/2005powerseminar-ca2 [2].
3. SEM1800 – TI's 2008/09 Power Supply Seminar, Topic 3, 2008/9: http://www.ti.com/2009powerseminar-ca2 [3].

For more information on these and other power solutions, visit: www.ti.com/power-ca [4]

Source URL (retrieved on *12/23/2014 - 12:28am*):
http://www.ecnmag.com/articles/2009/10/designing-emc-compliant-automotive-switching-buck-regulator

Links:
[1] http://www.ti.com/2003powerseminar-ca2
[2] http://www.ti.com/2005powerseminar-ca2
[3] http://www.ti.com/2009powerseminar-ca2
[4] http://www.ti.com/power-ca