Comparing motor-control techniques

Daniel Torres, Applications Engineer, Microchip

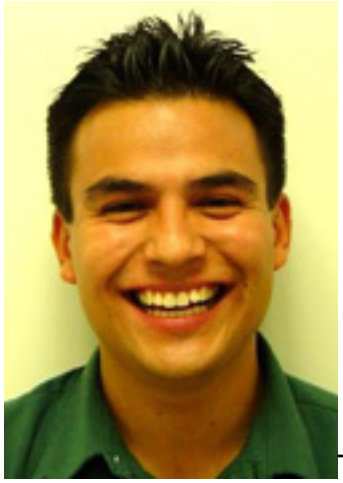

The majority of motor-control designers are consistently and continuously looking for methods to improve efficiency while reducing system cost. These are the two main factors that are driving the efforts to improve existing motor designs and motor-control techniques.

A good example of this trend is the Permanent Magnet Synchronous Motor (PMSM). This type of motor has displaced the AC Induction Motor (ACIM) in various applications, due to higher efficiency, better torque-size ratio and wider speed range.

PMSM motors are quite similar to Brushless DC (BLDC) Motors, in that they have the same structure and the same components. Both motors have permanent magnets in the rotor that interact with the magnetic field produced by the stator coils.

Nevertheless, PMSMs have a different Back-Electromotive Force (BEMF), since the flux linkage between the stator and the rotor is not trapezoidal. In the PMSM, the BEMF is sinusoidal. This is an intentional effect produced by the way the coils in the stator are wound (in a sinusoidal fashion), while in the BLDC motor the stator coils are evenly wound. (Figure 1 shows BEMF waveforms for both motor types.)

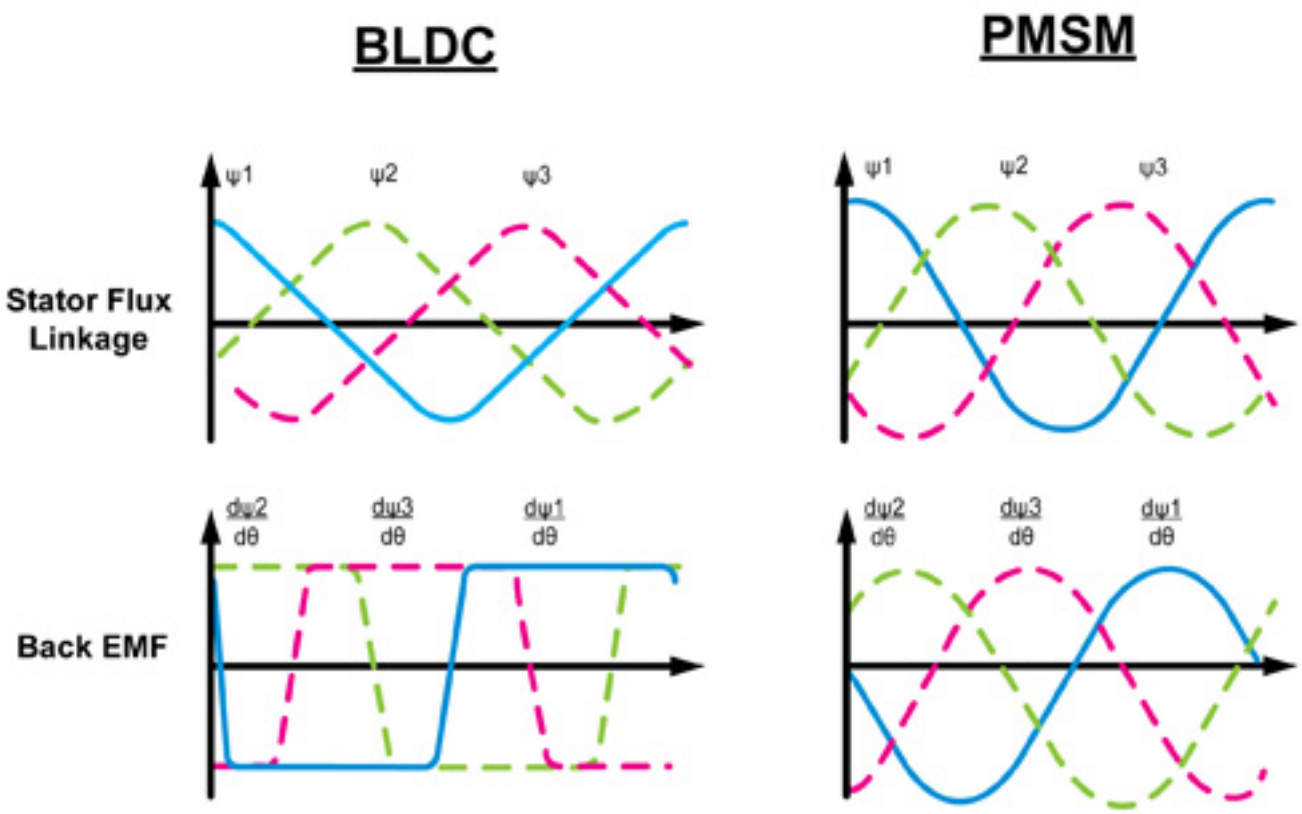

Figure 1. PMSM vs. BLDC BEMF Waveforms

As a consequence, the PMSM is more efficient and has lower torque ripple than the BLDC motor. It is important to mention that these improvements are also a result of the different control techniques utilized on PMSM motors, as compared to BLDCs.

The most common technique utilized for controlling BLDC motors is trapezoidal control. However, both PMSM and BLDC motors can be controlled using sinusoidal control and Field Oriented Control (FOC).

FOC has become more popular in recent years, due to the fact that the cost required to implement this technique is no longer a constraint. The available technology and manufacturing processes now make it possible to implement this control technique in a 16-bit, fixed-point machine, such as Microchip’s dsPIC Digital Signal Controllers (DSCs).

Efficiency is another factor that has allowed FOC to gain ground over sinusoidal and trapezoidal control techniques. FOC is well suited for applications in which the hard requirements are low noise and torque ripple, high efficiency and good torque control over a wide speed range.

Sensor-based vs. Sensorless Motor Control

All of the aforementioned control techniques need to know the position of the rotor in order to apply the correct amount energy at the right time. There are different methods to obtain the position of the rotor; some based on sensor readings, and some that are done without traditional sensors.

Sensor-Based Techniques
The sensor-based techniques employ electromechanical sensors coupled to the rotor to provide the speed and position of the rotor. Among the most commonly used sensors are resolvers, encoders and hall-effect sensors. BLDCs and PMSMs are usually operated with one or more rotor-position sensors, since the electrical excitation must be synchronous to the rotor position.

In low-cost, sensor-based applications, the most common sensing topology consists of hall-effect sensors mounted in the rotor. Three hall-effect sensors provide information for each 60º progress in the rotor's position, which provides the exact timing for motor commutation.

For applications in which precise position sensing is vital, the best sensing topology is the resolver. It is also the most expensive, since it is externally mounted on the motor. Due to its high resolution (1024 states per revolution or higher) and its ability to sense absolute position, this is the preferred position sensor for servo applications in industrial control.

In the case of optical incremental encoders, the resolution is still very high (around 512 states per revolution), although no absolute position can be sensed at power up. They are also expensive, since the optical encoder is externally mounted. Due to their resolution, they are also used in servo applications. Figure 2 shows the sensor output waveforms for all three sensor types.

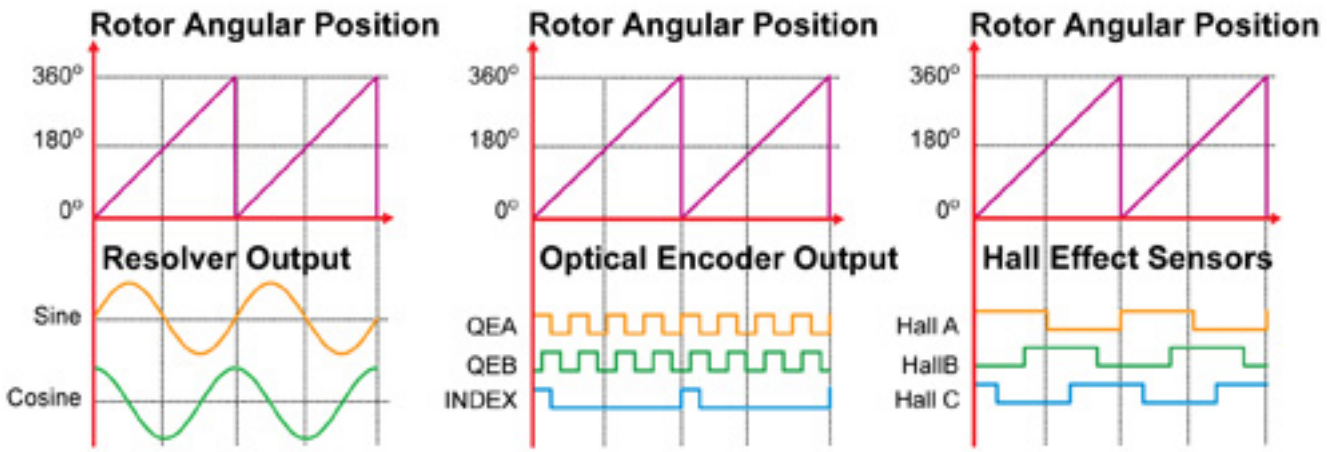

Figure 2. Sensor Output Waveforms (not to scale)

Sensorless Techniques
For reasons of cost, reliability, mechanical packaging and especially if the rotor runs

immersed in fluid, it is desirable to run the motor without position sensors. This is known as sensorless operation.

The obvious cost advantage of sensorless control is the elimination of the position sensors. If low cost is a primary concern, very-low-speed motor operation is not a requirement, and the motor load is not expected to change rapidly, then sensorless control may be the better choice for an application.

It is possible to obtain the position of the rotor and the motor speed by “sensing” the BEMF voltage on an undriven motor terminal during one of the drive phases, or by “sensing” the current flowing trough the motor coils.

Position Sensing Using Voltage Phases (BEMF)
When a BLDC rotor turns past each stator winding, BEMF is generated, which opposes the main voltage supplied to the other windings according to Lenz’s law. The polarity of this BEMF is in the opposite direction of the energizing voltage.

The BEMF motor waveform varies as both a function of the rotor’s position and speed. Detection of position using the BEMF at zero and very low speeds is therefore not possible. Nevertheless, there are many applications that do not require positioning control or closed-loop operation at low speeds. For these applications, a BEMF method is appropriate.

In order to detect the rotor’s position, this method is always looking for the zero-crossing points occurring in the BEMF signals. Once the BEMF signals are obtained, they are compared to the motor’s neutral voltage. A zero-crossing point occurs when the BEMF voltage is equal to the neutral voltage.

The BEMF zero-crossing technique is widely used because:

• It is suitable for use on a wide range of motors.
• It requires no detailed knowledge of motor properties, as a result less time is spent tuning.
• It is relatively insensitive to motor manufacturing tolerance variations.
• It will work for either speed or torque control.

Position Sensing Using Phase Currents (dual shunt resistor)
The dual-shunt-resistor technique utilizes the information contained in the current flowing through two motor coils, in order to estimate the motor position. The voltage present at the shunt resistors is proportional to the current flowing through the coils. This voltage is then amplified using a high-speed, rail-to-rail, low-noise operational amplifier, such as Microchip’s MCP602X devices.

It is possible to estimate the rotor position by using a model of a PMSM Motor, which can be represented by a series circuit composed of the winding resistance, winding inductance and BEMF of the motor. This sensing method can only be used with FOC, since it utilizes the currents measured through the shunt resistors to derive the outputs of the FOC motor model to estimate the rotor position.

The position and speed estimator is based on a current observer. This observer is a digitized model of the motor; meaning that the digitized model provides a software representation of the hardware. However, in order to match measured current and estimated current, the digitized motor model needs to be corrected using a closed-loop control. Figure 3 shows the motor model and the current-observer block diagram.

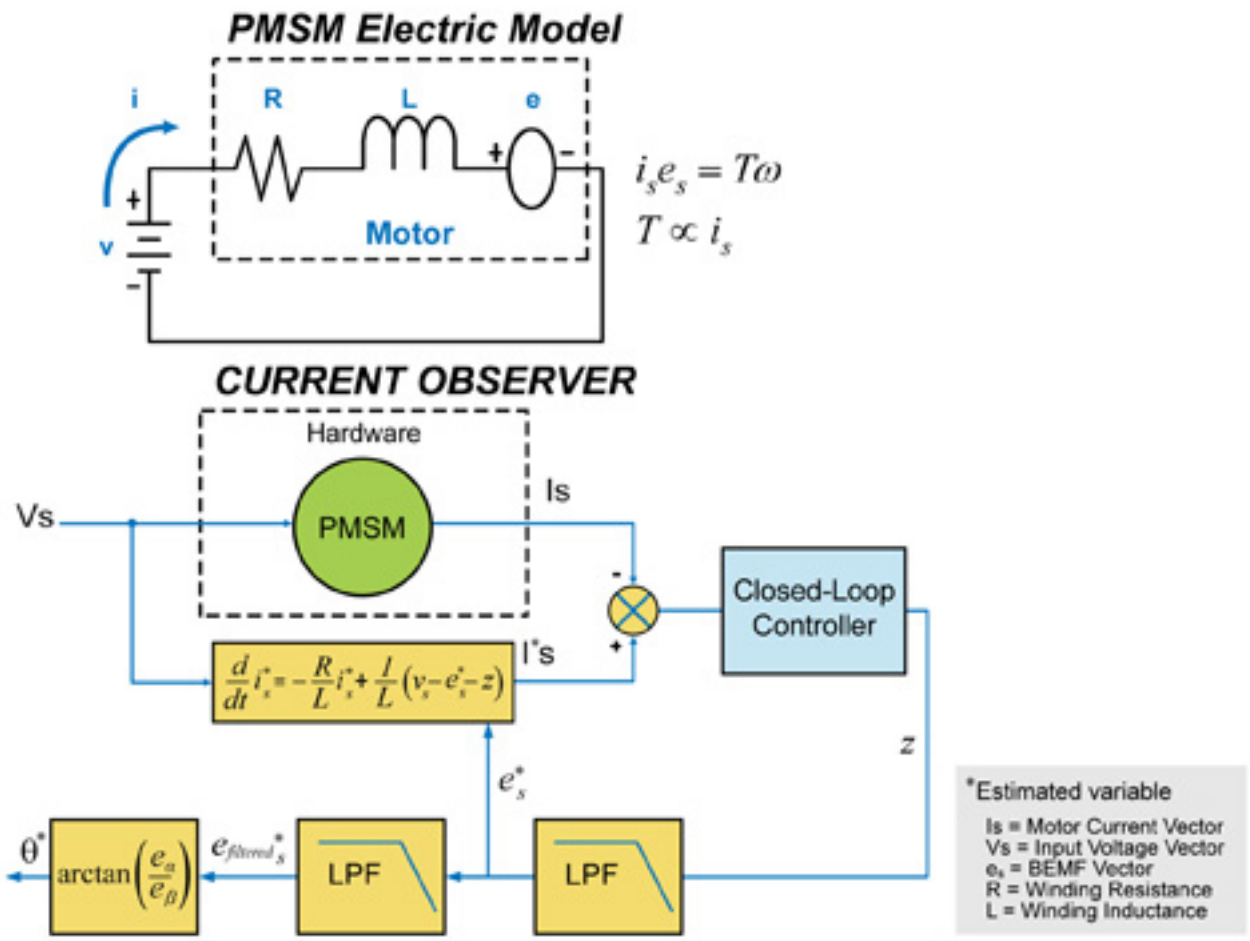

Figure 3. Motor Model and Current Observer

BEMF estimation is first performed by filtering the compensation factor (Z). The current estimated BEMF is then fed back into the model to provide a new estimate of the BEMF (es). After compensating for the digitized model, it is fair to assume that the model is accurate and that the estimated BEMF is the same as the actual motor BEMF.

After subsequent filtering of the estimated BEMF vector components, they are used to calculate the motor's angle position (?). The angle position is proportional to the inverse tangent of the estimated BEMF vector components. The motor's speed is proportional to the rate of change of the motor's angle position.

Conclusion

PMSM motors are very similar to BLDC motors, as they have the same internal components. However, the PMSM coils are wound in a sinusoidal fashion, in order to increase efficiency, and reduce noise and torque ripple.

BLDC motors can be controlled using trapezoidal, sinusoidal or field oriented control. PMSM motors are usually controlled using sinusoidal or field oriented control. These motion-control algorithms can use sensor-based or sensorless position sensing techniques, depending on the application.

Sensor-based techniques are used in applications where high-resolution position sensing is a must. The cost of using sensors is relatively high, compared to the circuitry utilized in sensorless techniques. Sensorless techniques are utilized in applications where low cost is a primary concern, very-low-speed motor operation is not a requirement, and the motor load is not expected to change rapidly.

Source URL (retrieved on *07/26/2014 - 4:49am*):
http://www.ecnmag.com/articles/2009/10/comparing-motor-control-techniques