Storage in Streaming Media: Advanced Solid State Storage SSDs Meet Performance and Reliability Demands

Gary Drossel, Western Digital

The rapid adoption of streaming media in embedded applications has been largely driven by decreasing bandwidth costs. In 2005, it cost approximately $.89 per gigabyte (GB) delivered for up to 49,000 GB (47.8 terabytes) of bandwidth. Today, a major content provider could pay a meager $.05 per GB delivered for 500 terabytes of bandwidth. This is a monumental shift, and arguably the driving factor is accelerating the “digital appeal” of storage in a myriad of applications.

As the costs for bandwidth dropped, streaming media applications exploded to include live or on-demand content to websites, classrooms, corporate events, medical procedures from renowned hospitals and medical centers, and delivery to IP-enabled mobile devices. Having overcome significant bandwidth issues, network operators and content providers now face a host of new challenges. At the very heart of these challenges lies storage technology.

While there are a number of storage system options, including high-performance hard disk drives and advanced solid state drives (SSDs), it is important to find the right combination of business-critical performance, reliability and cost.

Many data streaming applications within the enterprise data center, medical facility or for the military are mission critical where failure is not an option. In these systems requiring 24/7 uptime, storage is one of the most important design considerations and yet is often an overlooked variable. These embedded system OEMs require storage systems with high performance, high reliability and superior data integrity. For example, today’s home healthcare equipment such as heart and blood pressure monitors and glucose meters now stream live data to hospitals or mobile professionals with rugged medical tablet PCs.

These applications typically have a rugged always-on usage model and are subject to user error from unsafe device power downs that cause device and data corruption. Add excessive shock and vibration from careless handling and there is an epidemic of equipment field failures.

Media servers and streaming appliances are now deployed in data centers, network hubs, video surveillance installations in public transportation or private enterprise, hospitals, universities, the list is growing exponentially. In applications were data storage is key for record archive and retrieval, cost per gigabyte is the key metric where hard disk drives currently deliver a superior dollar per gigabyte and/or dollar per terabyte ratio. Data-critical information for media streaming appliances must be delivered quickly and reliably, and often for extended time periods. Plus, media

content customers tend to need higher data rates and/or longer duration than commercial customers. In read-heavy applications such as media servers and appliances, technology advances in today's SSDs make them the storage media of choice in many media streaming applications. That is because streaming bandwidth is determined by how many gigabytes per second the controller can deliver data to a server or servers, as opposed to the IOPS hard disk drive methodology that handles the number of I/O requests per second.

Today's SSDs deliver the faster read speeds that are so critical to large file and media delivery with no interruptions stops or stutters. SSDs also offer low latency and are capable of up to thousands of random reads per second. In addition, advanced solid state storage technology is engineered for the storage needs of critical system or harsh environment applications that require imperviousness to shock, vibration and extreme temperatures while delivering ultra low power consumption and advanced storage algorithms that guarantee maximum reliability and long product lifecycles.

Advances in Solid State Storage

SSDs have become popular storage solutions due to its high performance, high reliability and long product life that results in a lower total cost of storage ownership. Embedded system designers are realizing the advantages of SSDs to satisfy the challenging requirements of industrial-grade systems. As SSDs are designed into more and more industrial and streaming media applications, it is important to understand that not all SSD products are engineered equally. It takes a thorough evaluation of the technology inside an SSD to fully appreciate if it was designed for use in retail or consumer applications from advanced storage technology required for a 24/7 data streaming application.

Protection from Power Anomalies

It is a well-known fact that a leading cause of solid state storage system field failures is drive corruption from a power disturbance. An unexpected power-down, brownout, power spike or unstable voltage level often produces a corrupted drive and ruined data. During this costly unscheduled downtime, field technicians must work quickly to reformat drives, reinstall operating systems or return products.

This drive corruption can be averted by incorporating voltage-detection circuitry within the SSD. When a power fluctuation or interruption is sensed, the host system transmits a busy signal to the storage media to assure no additional commands are received or lost until power levels return to normal. This integrated voltage detection technology eliminates drive corruption and significantly reduces maintenance, warranty and other unscheduled downtime costs, lowering the total cost of storage ownership.

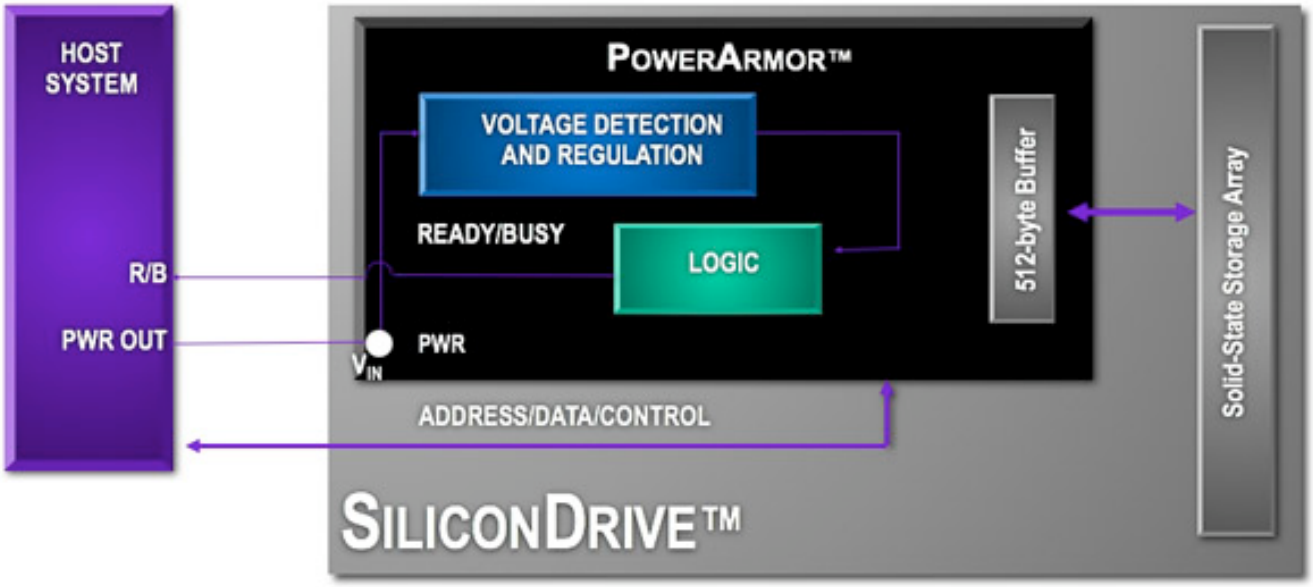

Figure 1. Voltage detection circuitry integrated into SSDs provides an "early warning" of a power anomaly sending a busy signal to the host so no more commands are received until power levels stabilize.

Monitoring SSD Useable Life

OEM designers often ask "How long will this SSD last in my application?" Traditional SSDs and flash cards used in consumer products basically operate until they fail, without warning. Sudden, unforeseen failures cause expensive delays, disruptions and data loss.

To eliminate this uncertainty, technology is available that acts as an early warning system to monitor the remaining amount of a drive's useable life in real time without application downtime. Using this information, the SSD can be replaced before it can cause any unscheduled downtime or loss of critical data, which is especially relevant for data streaming appliances.

Data Integrity and Multi-Year Product Life

Solid state storage solutions implemented by OEMs may need to last a minimum of five to 10 years and must perform in a variety of usage models and environments. Sophisticated management algorithms such as advanced error correction code (ECC) algorithms detect data distortion errors caused by signal noise or others forms of interference and correct the inevitable errors. Patented wear-leveling algorithms write data evenly over the entire SSD, resulting highest reliability over the longest possible life.

SSDs for the Future

From web casting, to video on demand, and media distribution or content delivery network applications, streaming media applications demand high performance and high reliability in a wide variety of usage models. SSDs are developing an important role in these applications, based significantly on their high performance, high reliability and ultimately, low total cost of storage ownership.

By integrating these advanced solid state storage technologies directly into SSDs, major challenges in today's data streaming applications are addressed head-on. Couple this with the exponential growth of VoIP and data streaming applications and advanced SSDs are well positioned to meet the high performance, high reliability and superior data integrity requirements essential to demanding streaming media environments.

Source URL (retrieved on *07/26/2014 - 12:36pm*):
http://www.ecnmag.com/articles/2009/09/storage-streaming-media-advanced-solid-state-storage-ssds-meet-performance-and-reliability-demands?qt-recent_content=0