Design Talk - Circuits

Editor's Note: When designing at the board level, there are always new things to consider. Here are some essays on design to help you in your work.

Setting the Mood in Solid State Lighting
By Mike Keene, Endicott Research, www.ergpower.com [1]

With the emergence of new lighting applications and a plethora of novel capabilities that LED-based solid-state lighting systems promise to bring us, engineers and lighting designers will have the ability to transform the way we see the world. One feature that these specialized SSL systems are readily capable of is the ability to tune the chromaticity of light emitted from a luminaire. Don’t like the color of the light in the room? No problem: simply turn a knob, point to a color on your smartphone touch screen, or make a few clicks on your mouse, and you will have all of the colors of the rainbow (or the CIE 1931 color space, for all you nitpickers) at your fingertips.

Systems can also be configured for more conventional functionality to emit white light of varying color temperatures. By populating luminaires with cool and warm color temperature LED strings and varying the current level in each string, one can mix the color of the “cool” (down to 2700K) and “warm” (up to 7500K) LEDs with a diffuser to emit a white light of varying color temperature. Similarly, a wide variety of colors, not limited to the Planckian locus, can be created via manipulation of red, blue, and green LEDs within a luminaire. This manipulation of color temperature and/or chromaticity can be accomplished via pulse width or linear modulation of the separate (warm and cool, or red, blue, and green) LED string currents.

In most cases, pulse width modulation, or PWM, will allow for a more consistent color from each LED string throughout the dimming range. It will also allow for a wider color control range, as the LEDs can be easily dimmed by a PWM to .01% of their nominal light output. Linear modulation of LED string current will work as well,

and there is no possibility of visual artifacts, as there is with PWM, but the LEDs will not maintain a color consistency over the entire range. Driver circuitry will also be limited in its ability to dim less than 5 or 10% of nominal current, which will have an impact on the range of control. Driver cost and complexity will be higher for these higher functionality drivers than for single string, or monochrome, luminaires, but those willing to pay for the features will have a nearly unlimited set of options when it comes to setting the mood.

Model-Based Design

By Bill West, Kollmorgen, www.danahermotion.com/kollmogen [2]

Mechatronics is the marriage of the mechanical, electrical, software and systems engineering disciplines into one complete system solution. Modeling is a fundamental component of Mechatronics. The purpose of model-based simulation is to evaluate a design quickly and cost effectively, so to be effective, useful and not a waste of time, the model must accurately represent the actual system.

Model-based designed provides the motion system designer an innovative and cost effective methodology for motion control system design. Viewed from the top down, performance requirements for the motion system are specified and driven by the process or performance that the machinery has to achieve. A systems-based design approach requires the subsystem design start and stop at the same time, such that subsystem interactions can be optimized to ensure optimum system performance.

Model-based design allows various system solutions to be evaluated, without the time consuming and often costly investment in system prototyping. If a machine design can be narrowed down to two or three legitimate ideas before metal is cut, software is written and printed circuit boards are designed, the chances of keeping a project on schedule and under budget are significantly increased.

Sample requirements that can be evaluated with today’s simulation and modeling tools:
• Settling time and velocity regulation
• In multi axis systems - the interaction of and coordination of the individual axes
• In an industrial robot application – the precise coordination of multiple axes to move the robot is a simple straight line
• In a typical master slave geared application - determining whether electronic gearing or mechanical gearing should be used

Accurate modeling allows the systems designer to select components that will best support the application. For example, model-based design allows the design engineer to quickly and cost-effectively determine the optimum motor frame size, rotor inertia or required velocity loop bandwidth to meet performance requirements.

Today's project managers are faced with reduced budgets, smaller resources pools and shrinking time lines, so making the most limited resources is key. Systems modeling can highlight strengths and weakness of each specific subsystem. This provides insight into what needs to be redesigned and what does NOT need to be redesigned in order to meet performance requirements.

The systems designer who understands the power of modeling, and perhaps more importantly, its limitations, will have a competitive advantage over one who does not. The designer needs to understand specifically where the model is accurate and where it is not. System models vary in complexity. When a model is created the designer has to have a clear understanding of what features they will be modeling. Making a model more complex than required can be both costly and time consuming, with little or no benefit.

The iterative process of modeling and measuring must be followed until the outputs of model and system match on the parameters of interest. The performance of the model must always be monitored and compared to the actual mechanical system, and if the results do not correlate either the system or the model must be changed in pursuit of a match. In most cases the model changes, but often an assumption or simplification in the model will lead to a design enhancement in the actual system.

Stop Compromising Your PCB Layout

By David Donaldson, Application Engineer, W.L. Gore, www.wlgore.com [3]

As electronic devices are getting smaller and as consumers are demanding more features, designing printed circuit boards (PCBs) is becoming increasingly complex, not to mention that any finished design must face both performance testing and testing for compliance with Federal Communications Commission rules and other codes.

Many design engineers start by considering shielding requirements, doing such things as identifying the noisy components and placing them as far away from sensitive ones so as to reduce potential interference; however, they also realize that if the product fails in the testing lab, they will have to add cans to the board to provide shielding. To allow space for shielding cans, they may have to group the largest components together to make the best use of these cans. This reactive mindset translates to making the design conform to the shape of the shielding can and designing the board based on shielding requirements rather than seeking an optimal design that maximizes space usage and functionality.

Thermoformed, board-level shields permit design engineers to place components and circuits on a PCB based on function as opposed to the need to conform to the predefined geometry of the shield. Engineers can design the board based on circuit and component function without the constraints imposed by the shape of traditional shielding cans. Using a single thermoformed shield provides many specific advantages, all of which result in increased flexibility in board design, integration, and performance.

Board Design Flexibility

Today’s consumers want electronic devices in all shapes and sizes, which can dictate the enclosure design and the board shape. Stock components and cans are generally square or rectangular, and placing square cans on irregular boards has a significant impact on the engineer’s ability to place components on the board. Thermoformed shields can be shaped to fit any board, regardless of its geometry, without increasing the complexity of manufacturing the shield itself. Design engineers who opt for thermoformed shields at the outset of a design project can focus on effective board design without being limited by the shape and construction of their EMI shields

Additionally, thermoformed shields minimize the amount of space needed to shield individual areas. Rather than having multiple cans on a board, each of which needs its own trace to connect to the ground plane, a PCB only needs one thermoformed, multi-cavity shield with a single row of solder spheres to connect the individual cavities to the ground plane. For example, if an engineer plans to use individual cans to separate two cavities, each can needs its own ground trace with space between them. With a thermoformed, multi-cavity shield, only a single ground trace between the cavities is needed.

The design flexibility of thermoformed shields enables implementation of other necessary features such as mouse holes to avoid coupling, entry points for cables and connectors, and air perforations to facilitate cooling. This allows components and circuits to be placed in their optimum location without first considering shielding requirements.

Auto-controlTM: True Adaptive Control for DC-DC Power Conversion

Anthony Kelly, PhD., Powervation, www.powervation.com [4]

“Adaptive control” has become a widely-used term in DC-DC conversion in recent years, but the phrase is often misleading. It typically describes tuning algorithms that apply predefined rules or formulae to an input signal in order to adjust a process, with no ability to analyze the actual results of the adjustment and optimize parameters accordingly. Examples in DC-DC conversion include phase add and drop in multiphase DC-DC converters, and switching between DCM and CCM control modes at a predefined point.

These limitations hold for traditional analog controllers, whose coefficients are frozen in the system design, and for many of the newer digital controllers as well. Though some digital products allow limited parameter modification--e.g., by permitting designers to set coefficients via a GUI--these parameters are typically loaded at bench test or start-up and do not adapt during runtime to changing conditions. These products fail to meet the definition of a true adaptive controller: “a controller with adjustable parameters and a mechanism for adjusting the parameters in a way which optimizes a measured property of the system.”

Powervation has developed the first true adaptive control for DC-DC conversion. Powervation’s Auto-control continuously tunes parameters during operation and deals easily with a wide range of power stage variation and dynamics, such as those seen in power saving modes. This on-the-fly optimization provides much more precise control, ensuring a constant output voltage and a rapid transient response.

The benefits are substantial, and include:
• Improved system reliability and mean time between failure (MTBF)
• Easier design (Auto-control calculates parameters automatically; designers no longer have to derive them for every system design)
• Reduced system cost (allowing use of less expensive components, with Auto-control compensating as parts age)
• Easier implementation of energy-saving designs (greater ability to stabilize voltage makes possible efficient multi-phase designs)

Mechatronics in Miniature

By Lisa Schaertl, New Scale Technologies, www.newscaletech.com [5]

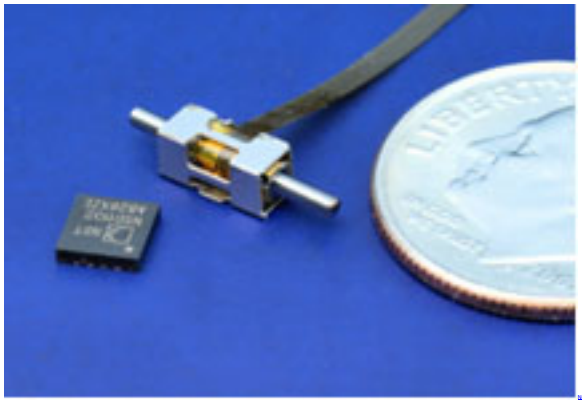

New motor and sensor technologies enable mechatronics in miniature. Closed-loop electromechanical motion systems, based on piezoelectric micro motors, measure just a few millimeters in size. These systems are being developed to meet the demand for:

- more features and performance in portable consumer electronic devices. Examples include improved picture quality in phone cameras, optical image stabilization in digital still cameras and video cameras, and zoom lenses in pico projectors.
  less invasive medical procedures. Under development are miniature mechatronic systems that are small enough to fit in the head of a standard endoscope, and even robotic devices that crawl across a beating heart.

  tiny electronic locking devices that fit in the space of a standard mechanical lock cylinder

This level of miniaturization brings new requirements to the mechatronic equation. First and foremost, of course, all components must be small. They must consume very little power, especially in portable consumer devices where battery life is a high priority. In most cases there is a requirement for precise positioning, meaning that position sensors and control electronics are needed for closed-loop feedback. Finally, the components must be robust enough to withstand the shock of being dropped, or the high temperatures of an automobile interior on a summer day.

Until a few years ago, the options for meeting these requirements were limited. Miniaturizing traditional motors below a diameter of about six millimeters results in an unacceptable loss of efficiency, useful force, and precision. Alternative motion technologies such as shape memory alloys, voice coil modulators and solenoids provide even less precision and force, and a limited range of motion (less than 2 mm).

Now with the commercialization of several types of piezoelectric motors, miniature mechatronics development is on the rise. At the heart of these micro motors are piezoelectric ceramic elements which change shape when electrically excited. This principle has been used for decades in devices such as ink jet printers and speakers. Piezo motors employ various mechanisms to multiply or magnify this very small motion and create millimeters of travel range.

Various techniques have been commercialized. In the smallest linear piezo motor, the SQUIGGLE motor, four piezoelectric ceramic actuators are attached to metal tube. The tube is threaded inside and a mating screw inserted. Applying a two-channel square wave to the actuators (figure 1) creates ultrasonic vibrations in the tube, causing it to move in an orbit similar to a person's hips in a "Hula Hoop." The tube engages the threaded screw and drives it along the tube in a smooth linear motion. Reversing the phase shift reverses the direction of the orbit, and hence the direction of the screw.

Thread friction drives the shaft and locks the screw in place when power is turned off. The highest efficiency of the mechanical coupling between the tube and the screw is achieved at the ultrasonic frequency matching the first bending resonant frequency of the tube.

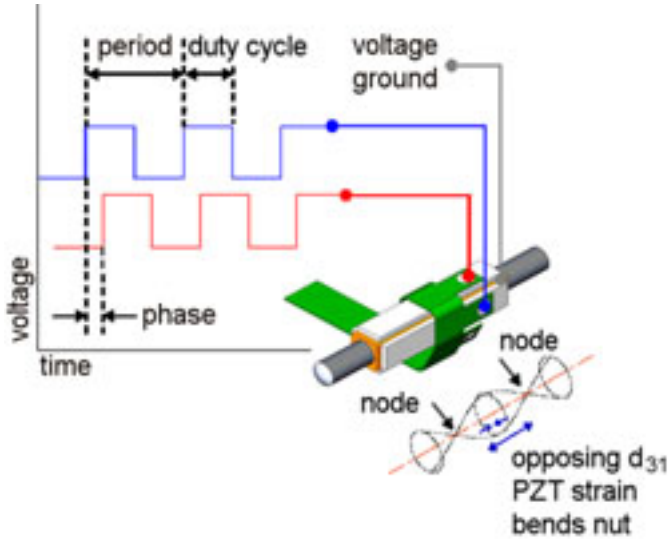

Figure 1 - a uses ultrasonic vibrations of the piezo elements to drive a threaded shaft

This motor is less than 3 x 3 x 6 mm, weighs less than 1 gram and has a push force of 30 grams force (3 N). It travels faster than 7 mm/sec and has a travel range of 6 mm.

In a typical mechatronic system, the motor is installed so that the screw pushes against the load to be moved. The screw must be allowed to rotate freely, therefore a light spring preload is used to maintain contact between the screw tip and the load, and provide good coupling between the threads of the screw and the nut.

Users can signal the motor to move in increments as small as 0.5 µm by signaling it to travel for a specific time at a known speed, where speed can be determined by the level of voltage applied to the piezoelectric elements (hence the vibration amplitude) or by the duty cycle of the vibrations.

However, motor speed varies with applied load and device friction. Therefore a closed-loop control system is needed to achieve exact positioning, repeatable positioning, or precise speed.

Sensors for closed-loop control

In a closed-loop motion system, a sensor detects the actual position of the load and feeds the information to the motor controller. The controller compares actual position to desired position, and moves the motor to correct any error. This allows the motor to reach a precisely controlled position. Similarly, controlled speed is achieved by adjusting the driver gain to minimize the difference between the required position and the actual position at regular time intervals.

Until recently it was difficult to specify a position sensor with tiny size and high precision to match the capabilities of SQUIGGLE micro motors. To fill this need, New Scale Technologies and austriamicrosystems developed a line of micro position sensors. The TRACKER sensor is a unique magnetic sensor with integrated on-chip encoder plus technology to essentially eliminate sensitivity to stray external magnetic fields. As such, it is not only the smallest sensor available, but also overcomes many of the limitations of both traditional optical encoders and magnetic sensors. It is less than 10 mm^2 in chip-on-board packaging, compared to 21 mm^2 for miniature optical encoders. Integrating the encoder directly onto the SOIC with the sensor array eliminates the need for external pulse counters, reducing the size of the supporting electronics needed.

A linear array of eight Hall effect sensors on the chip measures the spatially varying magnetic field produced by a multi-pole magnetic strip moving above the sensor. The magnetic field generates internal sinusoidal and phase-shifted sinusoidal signals. These signals are filtered and transformed into angular and magnitude values, representing the absolute linear position of a 2 mm long magnetic encoder strip pole pair. The position information is read via an I2C interface (figure 2).

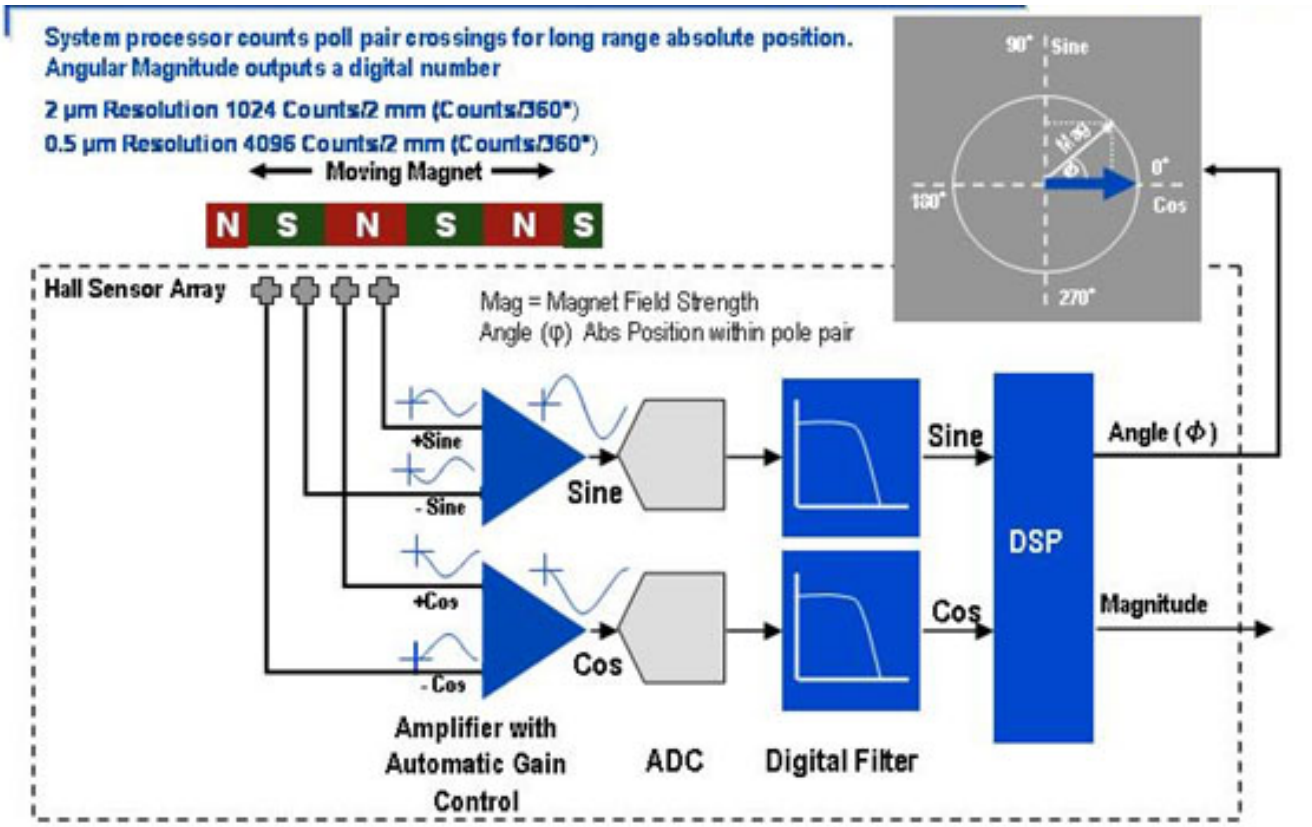

Figure 2 – Includes a magnetic sensor array and integrated encoder on a single chip.

Automatic gain control (AGC) adjusts for DC bias in the magnetic field and provides a large dynamic input range of the magnetic field for higher immunity to external magnetic fields than is expected with normal Hall Effect sensors. It also provides an absolute magnitude of the magnetic field intensity, which can be used to detect the end of the magnetic strip and thereby serve as a built-in zero reference, eliminating the need for an external reference. This allows the system to power off or be put into sleep mode, with rapid absolute position reading on power up to minimize the time a user must wait for the system to be ready; for example the time to align a lens in a camera.

Because no external light source is required, this technology is smaller than optical sensors and better suited to imaging applications, where light from the optical sensor source could be a problem.

Control electronics

The third pillar in a micro mechatronic system is the electronic controller. The NSD-1202 is a dedicated piezo motor driver ASIC capable of driving two SQL Series SQUIGGLE motors from a single 2.8 to 5.5 VDC supply. The two motors can be controlled independently using an I²C interface.

Four half bridge drivers create pairs of phase-shifted square waves with ultrasonic frequency as required to drive SQL Series SQUIGGLE motors. An on-chip DC-DC step-up converter and external boost circuit generates the high supply voltage (24 to 40 VDC) required by the piezoelectric elements of the SQUIGGLE motor. Total area required for the drive circuit is approximately 6 x 9 mm.

Next-generation motors now in development will operate directly from a 3V battery, eliminating the boost and reducing total drive circuit area to less than 3 x 3 mm.

The main building blocks of the system are a voltage reference, step up converter, I²C interface, registers, selectable feedback, and four (4) half bridge drivers (figure 3). Supplementary blocks such as biasing or power-on reset are not shown.

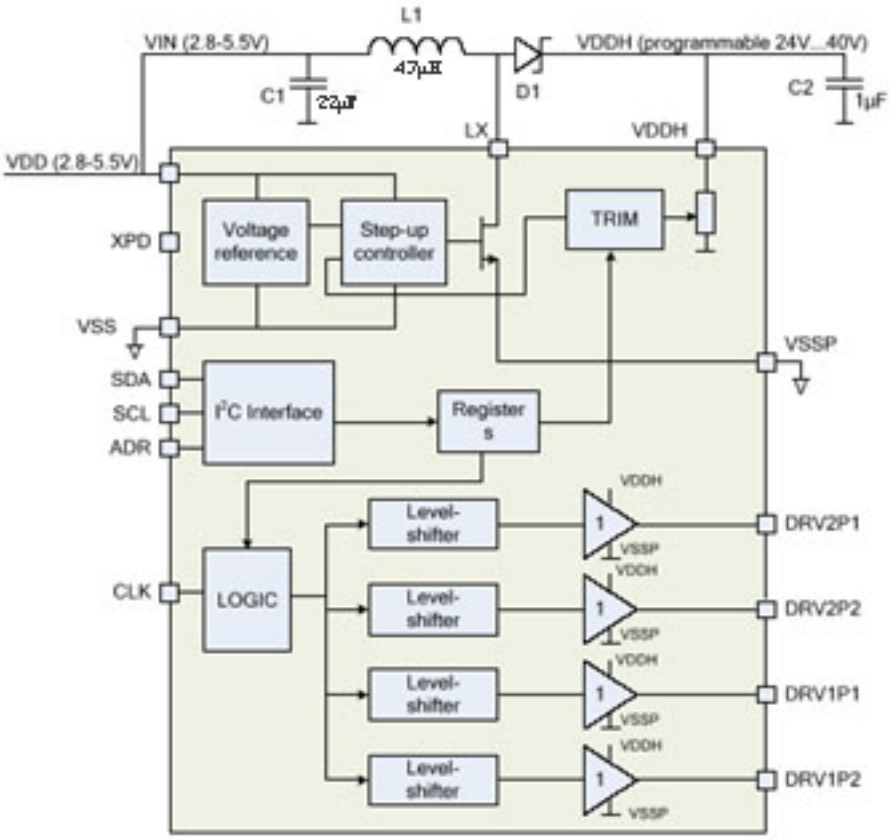

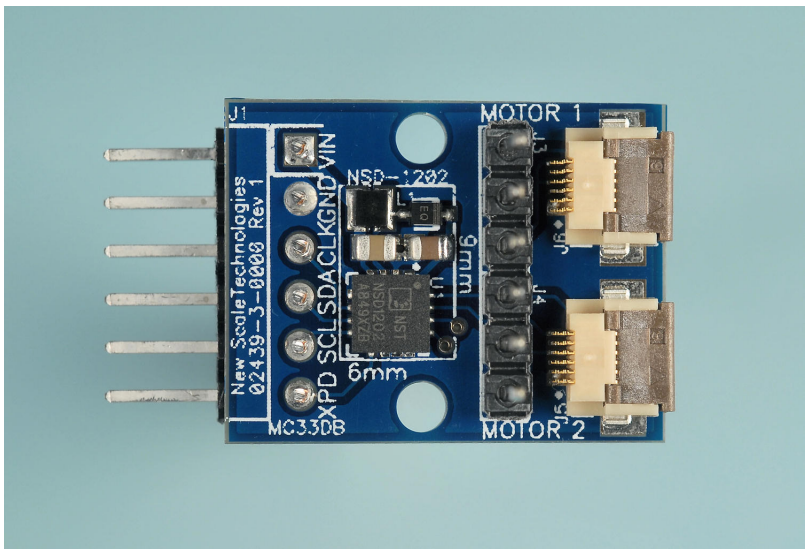

Figure 3: the NSD-1202 dual piezo motor driver ASIC.

The step-up converter is built as a hysteretic step-up converter. The half bridge drivers operate rail to rail (VSSP to VDDH). User supplied external components C1, C2, L1 and D1 provide voltage boost and regulation. The output voltage can be programmed via the I²C interface in 0.5V steps between 24V and 40V. This voltage, along with the duty cycle (or pulse width) of the drive signal, determines the speed of the motor.

Registers define the switching frequency of the motor, which can be dynamically adjusted from 140 KHz to 180 KHz for optimum motor performance. Other registers control motor direction and the number of pulses the motor is active (correlating to distance traveled). The XPD input enables a stand-by mode.

Reference design

New Scale offers a reference design and developers kit for the SQUIGGLE motor and TRACKER position sensor (figure 4). In this kit, the motor is mounted in a slide assembly slide assembly that demonstrates proper loading. The controller board connects to a PC via USB interface. Control software is included that allows the user to control and evaluate the motor using the graphical user interface or a scripting interface. Components can be removed from the kit with basic tools for subsequent integration into a system.

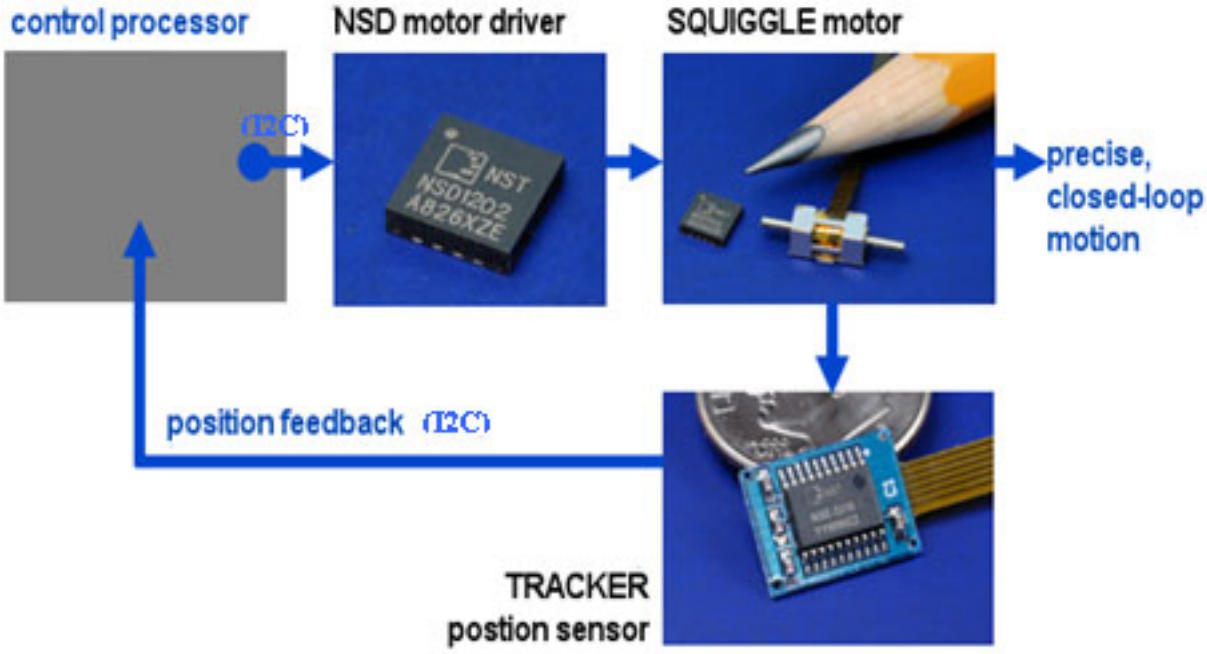

Figure 4 – SQUIGGLE motor reference design and developers kit.

Source URL (retrieved on *12/05/2013 - 6:10pm*):
http://www.ecnmag.com/articles/2009/08/design-talk-circuits

Links:
[1] http://www.ergpower.com/
[2] http://www.danahermotion.com/kollmogen
[3] http://www.wlgore.com/
[4] http://www.powervation.com/
[5] http://www.newscaletech.com/