Two Current Sense Amps Solve Single Amp Limitations

Greg Zimmer, Linear Technology Corporation

Each new generation of automotive and industrial designs have been faced with an increasing demand for precision control and diagnostic capabilities, as well as for reliability and safety features. Achieving these new features often requires precision current sensing, and as result, the demand for precision high-side current sense amplifiers has steadily increased in recent years. The applications for high-side current sense amplifiers range from motor servo control, solenoid positioning, battery charge and discharge circuitry, as well as for over-current monitors and short circuit fault detectors.

High Side Current Sense Overview

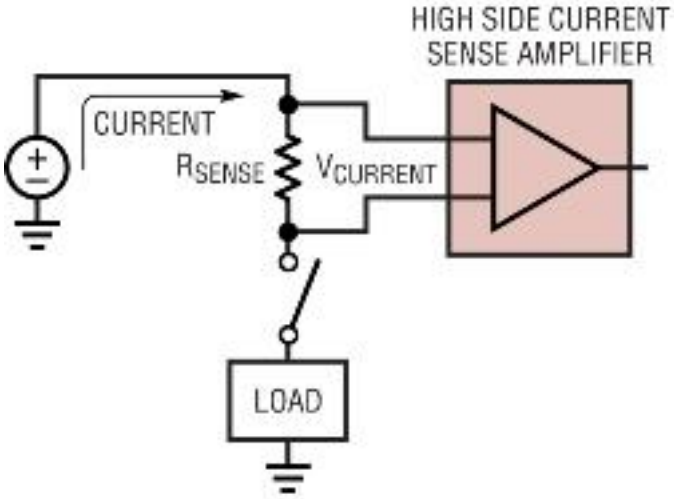

Figure 1. High-Side Current Sense Configuration

The most common method for measuring current is to measure the voltage across a small “sense” resistor (RSENSE), which is placed in the current path. To avoid problems created by placing a resistor in a ground path, the sense resistor is

Most Popular on ECNMag.com:

- Scientists Discover Light Force with 'Push' Power **[1]**
- Symbian Accidentally Certifies First Text Worm **[2]**
- Scientists Save India's Moon Mission **[3]**
- GE Targets Net Zero Energy Homes by 2015 **[4]**
- Lunar Orbiter Sees Apollo Landing Sites **[5]**
- 40 Years Later, “The Final Frontier” Ain't What it Used to Be **[6]**
- Damage eyed as shuttle heads toward space station **[7]**
- Institute Unveils OLED that is 75% More Efficient **[8]**
- Russia Still Blue Over Moon Landing 40 Years Later **[9]**
- Latest iTunes Release Ejects Palm Pre Users **[10]**

usually placed on the supply side of the circuit. As illustrated in Figure 1, a high-side current sense amplifier extracts a small differential voltage from a high dc supply voltage.

High side current sensing was traditionally accomplished with a handful of discrete components (resistors, capacitors, switches), op amps, differential amplifiers and/or instrumentation amplifiers. Today, however, dedicated high side current sense ICs can offer faster response, lower power consumption, higher accuracy and smaller space requirements. As a result, dedicated high-side current sense amplifiers are being widely deployed, fueling a demand for higher density devices. In particular, a dual device (two high- side current sense amplifiers in a single package) is desire-able for dual supply monitoring and can uniquely address a few common current sense applications.

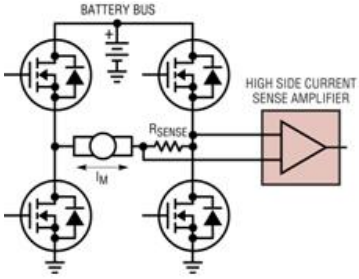

Figure 2A. H-Bridge with a Single Sense Resistor

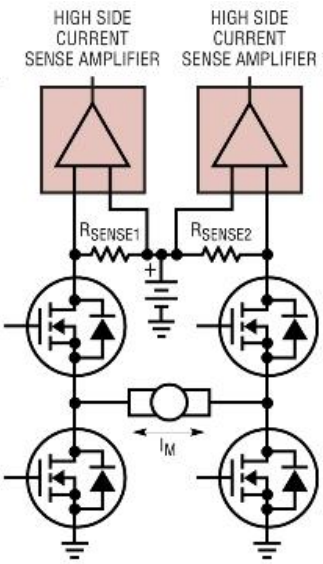

Figure 2B. H-Bridge with Two Sense Resistors

H-Bridge Driver Circuits

Actuator drives, such as those for a motor, are typically bidirectional in nature and usually based on an H-bridge topology. The H-Bridge MOSFET array (shown in Figure 2) uses pulse width modulation (PWM) to vary the commanded torque. Current monitoring can be used as part of a closed-loop servo and/or for fault detection and protection features. The classical current sense approach is to place a sense resistor in series with the load (Figure 2A). A better approach uses two sense resistors, placed between the power supply and each ½ bridge (Figure 2B). The sense voltages now accurately reflect the current in each side of the H-bridge, avoiding noise induced in the current sense amplifier as a result of large voltage swings that occur at the motor load. Furthermore, this split configuration detects MOSFET failures or load shorts, all of which may not be detected with a single-sense resistor.

Bi-directional Operation

Bidirectional current sense refers to monitoring current flowing in both directions through the sense resistor. For example, in a battery-powered system, a sense resistor may monitor the discharge current from battery to load and the same resistor could be used to monitor

charge current from charger to battery (see Figure 3). Bidirectional current sense amplifiers can offer a simple solution for bidirectional applications. Some of these amplifiers can detect both positive and negative sense voltages from common mode voltages up to 60V.

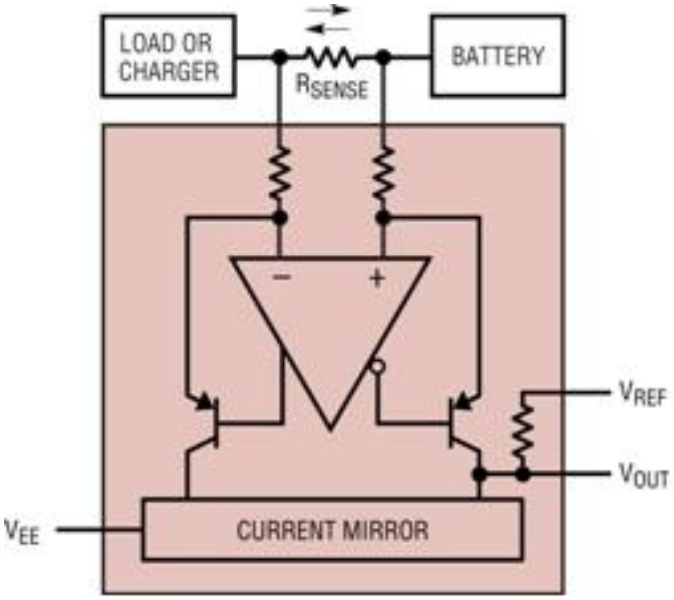

Figure 3. Bidirectional High-Side Current Sense Amplifier

An alternative to using a bidirectional current sense amplifier is to use two unidirectional devices with each amplifier monitoring current in one direction. An advantage of this technique is to increase the effective full-scale input sense range. To see this, consider that a single bidirectional amplifier must handle sense voltages that range from –VSENSE to +VSENSE. Since dynamic range, gain accuracy and response time depend on the full scale sense voltage, two separate amplifiers, each handling half of the full input signal range, can improve performance.

Bidirectional operation with two amplifiers can also be valuable when there are different current ranges in each direction. For a rapid charge system, as an example, charge current may be considerably higher than discharge current. For this situation, a separate gain setting for each direction can be used

and/or different sense resistors can be used for each direction. By using different sense resistors (as shown in Figure 4), excessive power dissipation can be avoided since both high charge current and low discharge current are not forced through the same resistor. Separate sense resistors also allow for adjusting the gain and resolution for each direction.

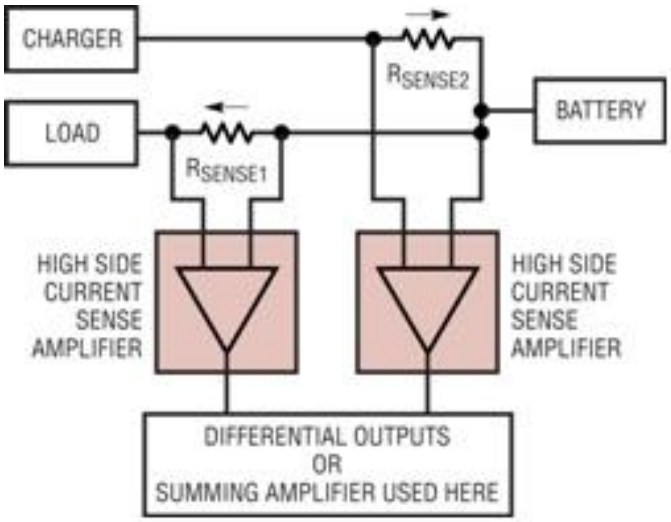

Figure 4. Bidirectional Operation using Two Unidirectional Amplifiers(1)

High/Low Gain Ranging

For unidirectional current monitoring across a large current range, two amplifiers with different sense resistors in series can provide a “high” current range and a “low” current range. This effectively divides the current sense requirement into two tasks; each handled by one amplifier, providing a wide dynamic range of operation. As illustrated in Figure 5, circuitry can be used to combine the current sense outputs and a MOSFET can be used to bypass the low-current sense resistor when operating in the high-current range. Bypassing the low-current sense resistor reduces power loss and increases it’s reliability by not forcing high currents through it.

Dual High Voltage, High Side Current Sense Amplifiers Set New Standards

For dual high-side current sense

applications, the LTC6103 and LTC6104 by Linear Technology are particularly well suited. These new devices have two high-side amplifiers in a single MSOP8 package; the LTC6103 contains two entirely independent amplifiers and the

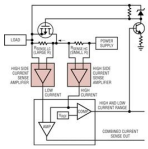

Figure 5. High/Low Gain Ranging Using Two Unidirectional Amplifiers

with outputs combined via a current mirror. The two independent outputs of the LTC6103 can provide a single differential output, which can be ideal for ADC interfacing. The single, bi-directional output of the LTC6104 output is convenient for feedback and servo control applications.

Each amplifier has a 1usec step response, allowing quick response when sensing rapid and perhaps unexpected current changes. With a common mode input voltage range up to 70V, they can operate with a wide range of system voltages. This high common mode voltage also provides plenty of headroom to operate through many load fault or flyback conditions, which can cause high voltage peaks. Operation over the temperature range of –40 to 125°C also make these parts appropriate for industrial and automotive applications.

LTC6104 contains two amplifiers.

Input bias current is much less than 1uA (100 nA typ), practically eliminating input current as a source of error for most applications. The max input offset voltage is ±450 uV; enabling these amplifiers to resolve sense voltages down to 450uV. With such precision, the user has a lot of flexibility in choosing a sense resistor to maximize dynamic range or minimize

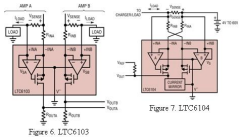

Figure 6: LTC6103 Figure 7: LTC6104

appropriate sense resistor is determined, the two gain setting resistors can be selected for the gain and impedance characteristics most appropriate for the application.

Fundamentally, the LTC6103 and LTC6104 operate as high common mode transimpedance amplifiers. As an alternative to current sensing, by way of a small sense voltage, these amplifiers can operate with large differential inputs. Such signal monitoring is not indicative of current measurements, but rather voltage power dissipation. Once an measurements.

Conclusion

Rapid adoption of high-side current sense amplifiers is proving their usefulness as flexible, general-use devices. Higher density configurations are generating significant interest for their size and

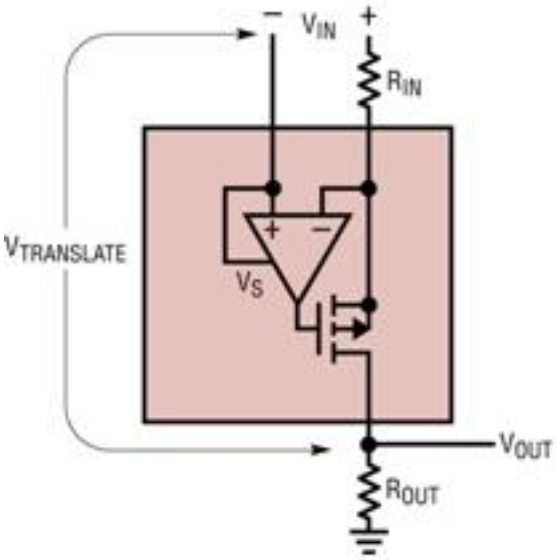

Figure 8: Voltage Translation

cost benefit, as well as for addressing a host of new applications. In particular, dual-current sense amplifiers can be especially useful for H-bridge current monitoring, bidirectional current monitoring and high/low gain ranging applications.

References

1. Output of bidirectional circuits can be differential or single-ended, via a summing circuit (not shown)
2. The minimum supply voltage (provided on +IN pin on Figure 8) is 4V and the maximum voltage that can be placed on the –IN pin is 70V, providing a full input translation voltage (VIN) up to 66V.

Source URL (retrieved on *09/15/2014 - 12:34am*):
http://www.ecnmag.com/articles/2009/07/two-current-sense-amps-solve-single-amp-limitations?qt-video_of_the_day=0

Links:

[1] http://www.ecnmag.com/news-Light-Force-with-Push-Power-071609.aspx
[2] http://www.ecnmag.com/blog-Symbian-Accidentally-Certifies-First-Text-Worm-072109.aspx
[3] http://www.ecnmag.com/news-Scientists-Save-India-Moon-Mission-071709.aspx
[4] http://www.ecnmag.com/news-GE-Targets-Net-Zero-Energy-Homes-071709.aspx
[5] http://www.ecnmag.com/news-Lunar-Orbiter-Sees-Apollo-Landing-Sites-072009.aspx
[6] http://www.ecnmag.com/article-space-program-40-years-later-072009.aspx
[7] http://www.ecnmag.com/news-damage-on-shuttle-071609.aspx
[8] http://www.ecnmag.com/article-OLED-75-percent-more-efficient-072009.aspx
[9] http://www.ecnmag.com/news-Russians-stung-over-moon-landing-072109.aspx
[10] http://www.ecnmag.com/article-itunes-ejects-pre-071609.aspx