Maximizing Eight-Channel Data-Acquisition System Performance Using a Single ADC Driver

Jakub Szymczak [jakub.szymczak@analog.com], Analog Devices, Inc.

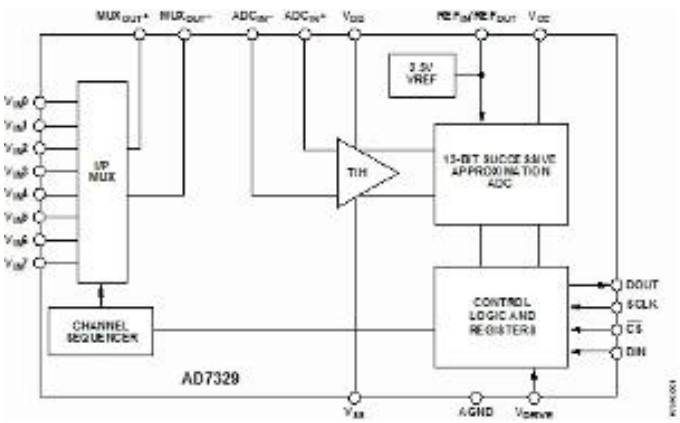

Figure 1. Functional Block Diagram

The principal factors that affect data acquisition systems are: speed, accuracy, power dissipation, package size, and component cost, with varying factors becoming critical depending upon the application. This article shows how a single op amp can be used to drive the analog-to-digital converter (ADC) in an 8-channel data-acquisition system, reducing the cost and size of the overall system.

An example eight-channel, 12-bit plus sign, 1-MSPS ADC (Analog Devices' AD7329) has true bipolar inputs with four independently programmable software-selectable input ranges: ±4×VREF, ±2×VREF, ±VREF, and 0-to-4×VREF. It can be configured to suit a wide variety of application requirements. As shown in Figure 1, the ADC comprises an 8-channel multiplexer followed by a track-and-hold and successive-approximation ADC, a channel

Most Popular on ECNMag.com:

- Scientists Discover Light Force with 'Push' Power **[4]**
- Symbian Accidentally Certifies First Text Worm **[5]**
- Scientists Save India's Moon Mission **[6]**
- GE Targets Net Zero Energy Homes by 2015 **[7]**
- Lunar Orbiter Sees Apollo Landing Sites **[8]**
- 40 Years Later, "The Final Frontier" Ain't What it Used to Be **[9]**
- Damage eyed as shuttle heads toward space station **[10]**
- Institute Unveils OLED that is 75% More Efficient **[11]**
- Russia Still Blue Over Moon Landing 40 Years Later **[12]**
- Latest iTunes Release Ejects Palm Pre Users **[13]**

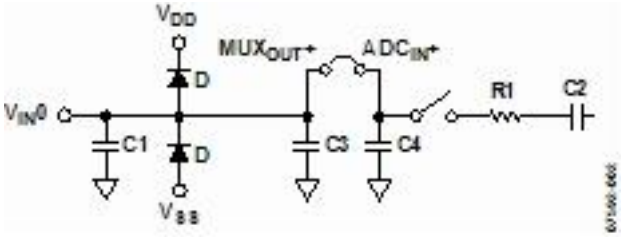

Figure 2. Analog Input Structure—Single-Ended Mode

sequencer, a 2.5-V reference, and an SPI-compatible interface.

The analog input channels are routed through the multiplexer to the MUXOUT+ and MUXOUT– pins. The ADCIN+ and ADCIN– pins connect to the track-and-hold input switch (R1) and sampling capacitor (C2), as shown in Figure 2. Note that the input source must provide the current required to drive the ADC input, settling to the required accuracy within the ADC's 300-ns acquisition time. When the track-and-hold switch goes from hold to track, the transient kick back from the ADC can affect the input source. Applications operating at the maximum sampling rate may require an input

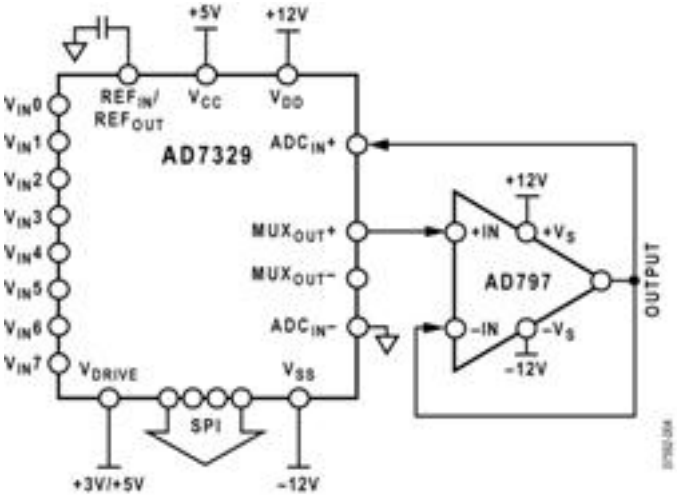

Figure 3. Buffer Between MUXOUT and ADCIN Increases Input Impedance

buffer amplifier to drive the ADC, isolating the source from the track-and-hold switch.

The flexible design on the ADC allows an op amp to be placed between the

MUXOUT+ and ADCIN+ pins. In Figure 3, the an ultralow-noise, ultralow-distortion op-amp, such as Analog Devices’ AD797 isolates the input source from the ADC’s input structure, increasing the input impedance and reducing the current required to drive the ADC. This configuration also allows a single op-amp to drive eight analog input channels at the maximum sampling frequency, leading to reduced component count, board area, and system cost.

Configuring the op-amp for gain, as shown in Figure 4, allows the ADC to

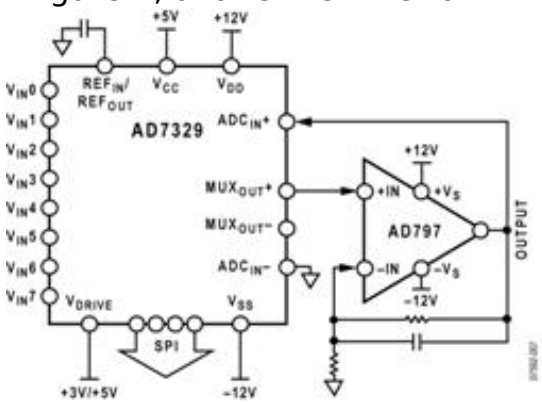

Figure 4. Gain Stage Between MUXOUT and ADCIN Facilitates Millivolt Inputs

odate signals in the millivolt range while maintaining high performance. Small signals are amplified by the AD797 with the amplified signal applied to ADCIN+. To maximize performance, the gain is chosen such that the full-scale input signal uses the full dynamic range of the ADC.

Some applications require the gain to be changed to accommodate input channels with different signal amplitudes. In these cases, a programmable-gain instrumentation amplifier (PGIA can be used in place of the op-amp.)
Reference: Analog Devices’ Application Note AN-0972, “How the AD7329 Helps Reduce Costs,” by by Claire Croke and Jakub Szymczak, www.analog.com/static/imported-

files/application_notes/AN-0972.pdf [1]

Jakub Szymczak is an application engineer in the ADC application group at Analog Devices, Inc. He holds a Masters Degree in Electronics from Wroclaw University of Technology. Jakub can be reached via email at jakub.szymczak@analog.com [2]. *For more information, contact Analog Devices, 3 Technology Way, Norwood, MA 02062; (800) 781 329 4700;* www.analog.com [3].

Source URL (retrieved on *05/05/2015 - 11:17am*):
http://www.ecnmag.com/articles/2009/07/maximizing-eight-channel-data-acquisition-system-performance-using-single-adc-driver

Links:
[1] http://www.analog.com/static/imported-files/application_notes/AN-0972.pdf
[2] mailto:jakub.szymczak@analog.com
[3] http://www.analog.com/
[4] http://www.ecnmag.com/news-Light-Force-with-Push-Power-071609.aspx
[5] http://www.ecnmag.com/blog-Symbian-Accidentally-Certifies-First-Text-Worm-072109.aspx
[6] http://www.ecnmag.com/news-Scientists-Save-India-Moon-Mission-071709.aspx
[7] http://www.ecnmag.com/news-GE-Targets-Net-Zero-Energy-Homes-071709.aspx
[8] http://www.ecnmag.com/news-Lunar-Orbiter-Sees-Apollo-Landing-Sites-072009.aspx
[9] http://www.ecnmag.com/article-space-program-40-years-later-072009.aspx
[10] http://www.ecnmag.com/news-damage-on-shuttle-071609.aspx
[11] http://www.ecnmag.com/article-OLED-75-percent-more-efficient-072009.aspx
[12] http://www.ecnmag.com/news-Russians-stung-over-moon-landing-072109.aspx
[13] http://www.ecnmag.com/article-itunes-ejects-pre-071609.aspx