Semiconductor Highlight: Integrated Drivers Optimize Stepper Motor Controller Design

Integrated Drivers Optimize Stepper Motor Controller Design

Stepper motor system designers demand increased value such as reduced BOM costs with higher performance, which is helping stepper motors gain popularity in many applications historically reserved for DC motors.

by Eric Wallentine, Product Marketing Manager - Industrial Products, Stepper Motor Drivers & CAN Transceivers, ON Semiconductor

Stepper motor system designers today require more than simple drivers. They demand increased value such as reduced BOM costs with higher performance, which is helping stepper motors gain popularity in many applications historically reserved for DC motors.
Stepper motors are gaining acceptance in a variety of industrial applications where flexibility and controllability are pre-requisites. These include small printing devices for POS terminals, mechanical slot machines, surveillance cameras, and production equipment such as weaving machines for the textile industry. As a result, a broader spectrum of engineers, including experienced motor control designers as well as those with less specialized skill-sets, demand drivers that deliver the right blend of controllability, ease of use, and reliability.

Integrated Driver ICs

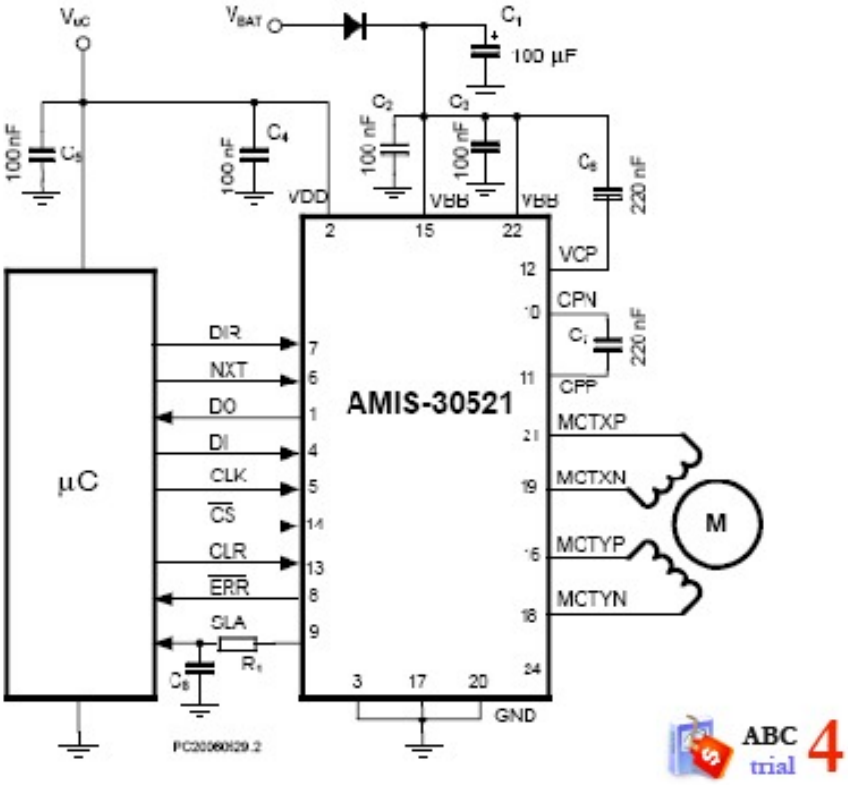

Combined high-voltage/digital fabrication technologies allow the integration of high-level control functions into single-chip stepper-motor-driver solutions. In addition, on-chip PWM generation allows experienced engineers to implement their own motor-control algorithms on a microcontroller linked via SPI and/or dedicated I/O pins. Some challenges remain, however, including working out how to implement functions such as stall detection or step-loss detection. ICs that provide motor speed and load-angle information help engineers achieve such a convenient, sensorless solution.
For engineers seeking yet greater integration, for example to reduce size or bypass software development challenges, implementing standard position-control functions on-chip reduces control requirements to high-level commands delivered over I2C, CAN or LIN. Utilizing one of these two approaches – using fully embedded control or external MCU – provides improved control solutions whether advanced software development capabilities are available in-house or not.

Working with an external MCU, a driver IC such as the AMIS305xx family performs current translation and generates the PWM waveform to drive the coils of the motor. In the simplest systems, this requires the MCU only to generate pulse and direction signals to drive a stepper motor. These can be input directly to the IC via dedicated pins. This minimises overhead and I/Os, thereby allowing one MCU to control several motors, for example in a multi-axis system. Offloading PWM generation to the driver IC in this way also frees MCU resources to implement more sophisticated functions such as micro-stepping to achieve smoother motion, minimise vibration and noise, and improve torque at low speeds.

Enhanced Diagnostics
One recently introduced stepper motor driver provides access to a “speed and load angle” pin (SLA pin). It offers a convenient way to achieve sensorless detection of conditions such as step loss and motor stall. Whereas conventional external sensors

and switches add to bill of materials costs, a

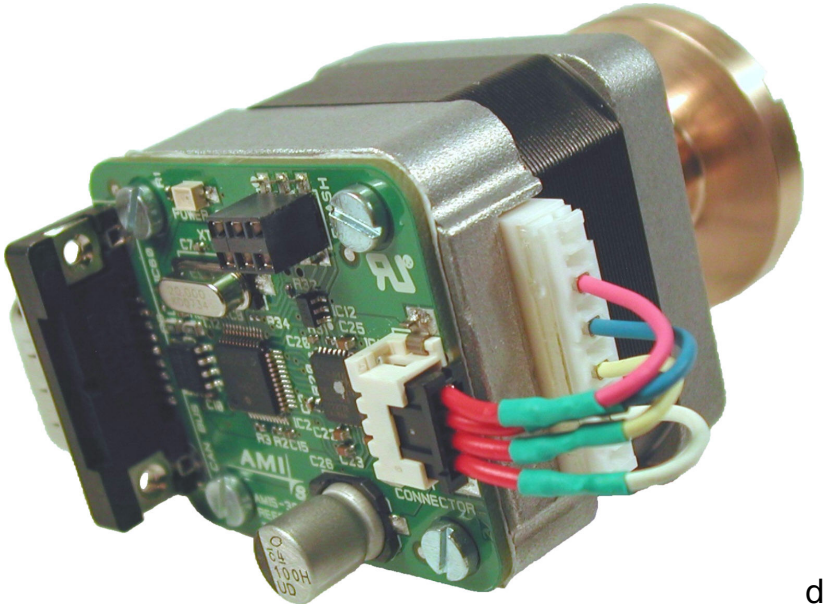

dds system and software complexity, and can impair overall reliability, sensorless closed-loop control using the SLA pin provides a direct reading of motor back EMF (BEMF), which can be used to drive various sensorless detection algorithms. In addition to providing a necessary tool for sensorless closed-loop control, the SLA pin also provides an in-situ tool, which allows developers the ability to characterize the resonances across motor frequencies and determine the unstable operating regions for the motor and system being characterized.

To present useful feedback information at the SLA pin, the rotor BEMF is sampled during every zero-crossing of the coil current. For each coil, there are two zero-current positions per electrical period, yielding in total four zero-current observation points per electrical period. Because of the relatively high recirculation currents in the coil during current decay, the coil voltage VCOIL shows a transient behavior. Information in the transients is useful to enhance motor control, by allowing a sanity check of the speed setting versus motor operation and characteristics and supply voltage levels. In this case the SLA pin can be used in SLA transparency mode, which is controlled by an internal register bit. For in-process diagnostics, however, non-transparent operation allows only the voltage samples at the end of each coil-current zero crossing to be visible at the SLA-pin. This mode produces a smoother BEMF signal more suitable for post processing.

Sensorless stall detection using the SLA pin can help create added-value features at the system level. In security camera applications, for example, in-process stall detection can identify any attempt to physically jam the camera’s motion. In other applications such as desktop printers, detection of a malfunction such as a paper jam can be implemented efficiently and at low cost, simply by detecting the voltage at the SLA pin, thus eliminating encoder strips and LEDs intended for detecting motor shaft motion. Moving on from basic step/direction control, other engineers are looking to control motor current and monitor information from the driver using a bus interconnect such as SPI. The driver’s on-chip SPI interface allows many motors to be controlled via a four-wire link, receiving current amplitude, step-mode, PWM frequency or EMC slope control from the MCU. Other features such as sleep modes can also be controlled and monitored. Feedback from the driver to the MCU can

include speed, position and coil-current information, as well as diagnostics such as open and short detection or high-temperature warning and shutdown.

Figure 1 shows how the integrated controller is connected to the MCU at the SPI port and the step/direction and SLA pins in a compact motor-control unit. By also integrating a CAN transceiver, the CAN stepper motor controller shown in Figure 2 is suitable for direct mounting to a NEMA-16 or NEMA-17 compliant motor housing.

The Next Level of Driver Integration

Where further savings in design, time-to-market or physical size are required, drivers integrating the functions traditionally performed in the MCU effectively move intelligence closer to the motor. An example is the AMIS306xx family, which implements the position controller and control/diagnostic interface on-chip, and also integrates functions such as microstepping and sensorless stall detection.
These controllers are designed to act as a bus slave, responding to high-level instructions received via an integrated LIN or I2C interface. The intelligence to translate a target position into the sequence of (micro) steps required to reach that position with the specified acceleration, speed and deceleration is contained on-chip, thereby further simplifying the controller design challenge.

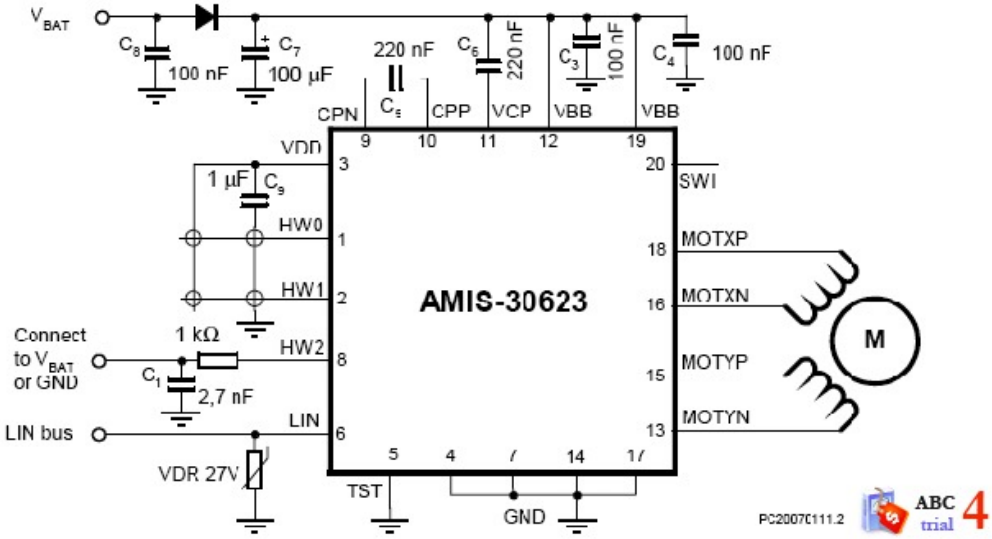

Figure 3 shows how full integration of the MCU functions further streamlines the bill of materials for a motor control module.

Extending Current Capability

Currently, many applications such as desktop and industrial printers, surveillance cameras, small industrial equipment and other applications such as positioning systems for stage lighting equipment have driven the high demand for stepper motor drivers below 2A. However, new low- and high-current motors are forcing highly integrated drivers to extend their current capabilities.

To address emerging applications requiring smaller motors, such as handheld equipment, ON Semiconductor has recently extended its AMIS305xx family to include the AMIS30511 and AMIS30512 devices rated for sustained peak currents up to 400mA and maximum currents up to 800mA for short duration. Conversely, demand for drivers rated for higher coil current, up to 6A maximum, is also growing, and new drivers are forthcoming to satisfy these requirements as well. At current

ratings in the 1.6A range and above, thermally enhanced packages with features such as an exposed pad are available, and allow these drivers to efficiently dissipate heat from the device during higher drive current operation.

Conclusion
Process technology supporting integrated high-voltage and digital circuitry have opened the way for a new generation of integrated motor drivers delivering design advantages as well as BOM savings. With further development of this architecture, more choices are emerging to enable designers to quickly achieve a highly optimised motor control solution with enhanced features and at lower BOM cost.

Source URL (retrieved on *05/23/2013 - 1:17am*):
http://www.ecnmag.com/articles/2008/10/semiconductor-highlight-integrated-drivers-optimize-stepper-motor-controller-design?qt-video_of_the_day=0