Power Relays Give Designers Much to Ponder

Jon Titus, Senior Technical Editor

Note: this is an expanded version of the cover story in our December 1 print edition.

My first experience with a relay came about when a friend found a radiosonde -- a small balloon-borne weather instrument -- in the woods behind his house. My friend Ben wanted the parachute, so I got the electronics. As a kid of 11 or 12, the circuitry didn't mean much, but it included a simple relay I experimented with. I could turn the relay on and cause a small light bulb to turn off. That seemed like a neat trick.

You can consider a relay as individual sections; a coil, an armature, contacts and its packaging materials. But after you look at the parts, you must combine and analyze overall relay characteristics so you can properly include one of these devices in a circuit as a whole.

Loads and Contacts
In general, the contacts in a *power relay* handle currents of 10A and higher. This type of relay could control a motor, high-power lights, a solenoid, or a larger relay. Unfortunately, many engineers do not understand the characteristics of the load they want a relay to control (Figure 1). "To start, they must know what the relay's contacts will switch," said Randy Hannah, development engineer in the General Purpose Relays group at Tyco Electronics. "That means they must understand the current, the voltage, the load type, whether they have an in-rush current, the ambient temperature, and so on. Then they can match their needs to appropriate contact ratings on a relay." Most data sheets provide load type-rating data from agencies such as UL and CSA in categories based on load characteristics that include horsepower, load resistance, and ballast operation. As a result, having an understanding of the various agency-approval load types plays an important role in selecting the right relay for a particular application.

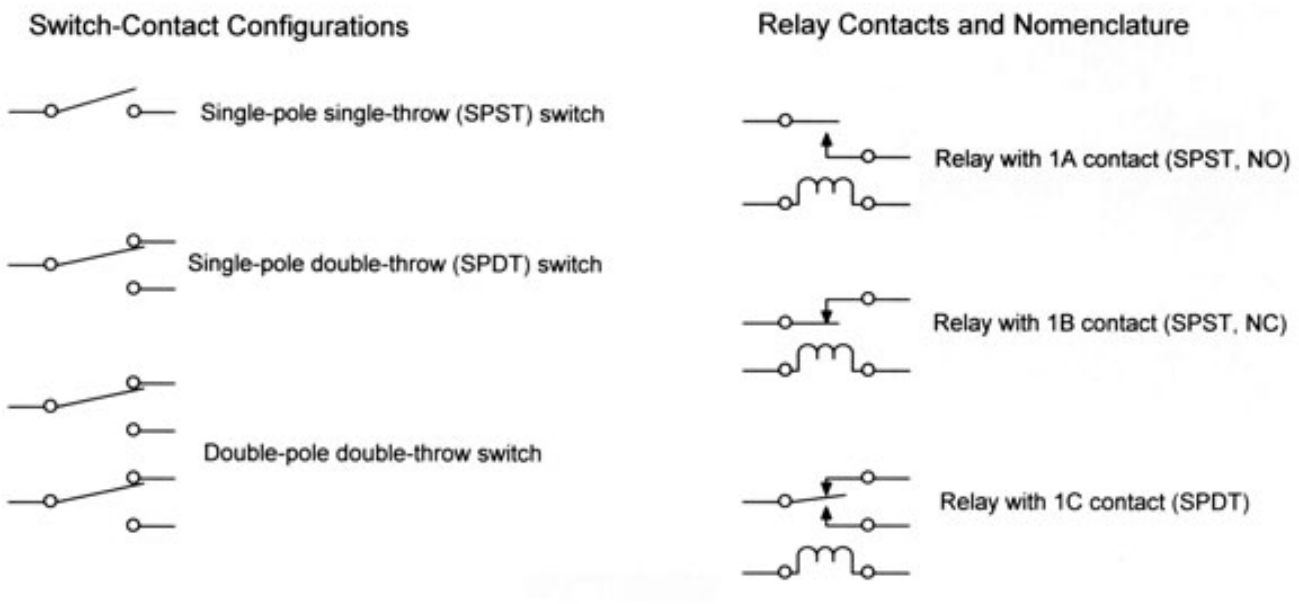

Figure 1. Most relays and switches share these three contact configurations. The number in front of the relay designation indicates the number of separate poles a relay provides. In this figure, NC = normally closed and NO = normally open.

Specifications for motor loads often include locked-rotor amps (LRAs) that can reach from three to six times a motor's normal current draw and full-load amps (FLAs) that specify the motor's current at full load. "These specs apply to compressors, blower motors, and pumps," said Hannah. "You can find the values in motor data sheets or on the motor's label." Although power relays typically operate for 100,000 contact closures with purely resistive loads, driving a motor can shorten contact life to as few as several thousand operations. (Relay engineers specify lifetimes in numbers of operations rather than in time.)

"You can almost always find another relay that can switch a higher current and deliver a longer relay life," noted Michael O’Donnell, product marketing manager at Magnecraft. "If you need to control a 1/4-HP motor, for example, and need more operations than a relay's data sheet specifies for that size motor, I recommend you investigate a relay with a higher horsepower rating.”

When a circuit requires a relay lifetime beyond the published 100-K or 200-K operations, engineers can look to manufacturers' endurance curves for guidance. "If a relay does not switch its maximum-rated load, the endurance curves help you predict the relay's expected life beyond the 100-K or 200-K operations," said O’Donnell. "If a customer uses a relay rated at 20A to switch a 20A resistive load, they have to accept the lifetime as published in the specs. Based on UL and CSA tests, we cannot predict a lifetime beyond that value. In addition, load types affect the life of relays. For example, engineers who think they can operate a relay 100 times a day for five years to drive a motor must realize that relay may not last that long. Always determine the number of relay operations you need for a specific type of load." Then use that information to choose an appropriate relay.

If customers say they need, about 200,000 operations, we recommend they look at

a solid-state relay (SSR). But an SSR does not provide a motor-control panacea. "SSRs pass some leakage current," noted O'Donnell. "As a result, a motor may 'chatter' and cause problems for bearings and gears. Or the motor might 'creep' along even though you think it has no power applied to it."

Choose an Appropriate Relay

Instead of matching a relay's specs to a task, engineers may think one type of relay will work equally well in many applications. "Consider the HVAC [heating, ventilation, and air-conditioning] industry in which engineers control fans and motors," said O'Donnell. "When they design new equipment, rather than specifying a new relay type, they might use a high-power relay they already have in inventory. They figure a high-power relay should easily handle a low-power load. But the contacts in a high-power relay must pass a relatively high current to keep themselves free of oxides. Low currents, such as a few 10s of milliamperes (typical of a monitoring or alarm circuit), will not break through the oxides well enough to create a reliable low-resistance current path. So, their newly designed systems begin to fail." In this type of situation, O'Donnell recommends engineers choose a relay specifically designed with contacts that handle low current.

"Engineers should remember that relays also have a minimum contact rating. I see them take a relay rated for 30A and try to run a logic-level signal through its contacts," said Harold Leipold, senior product engineer for general-purpose relays at Tyco Electronics. "That is a recipe for failure. Always look at the upper and lower contact ratings."

Relays Do Not Live Forever

No matter how you use a relay, it will "die" at some time. Rather than waiting for a relay to fail, you can monitor its "health" to some extent. According to O'Donnell at Magnecraft, if you see an increase in a relay's reaction time, or operate time, most likely the contact gap has increased due to contact degradation. "When that happens, measure the contact resistance," said O'Donnell. "Contacts tend to build up carbon as they degrade and they will not have as clean a surface as they had at first. The contact resistance increases rather quickly as you near the end of a relay's life."

"I do not know of a characteristic you can measure to indicate that a relay has gone through 50, 75, or 90 percent of its life," noted Tyco Electronics' Hannah. "Much depends on the load the relay controls." Also, according to Hannah, contact resistance doesn't tell you a great deal about the life of power relays that switch AC-line voltages. "You see about as much variation between loss of material due to wear as you would see on oxidized contacts that have remained 'unswitched' for a few days or weeks."

A relay contact reaches the end of its life after the contact material wears away, so the relay exhibits little to no remaining contact force. At that point, when powered contacts touch, they tend to weld together. That means the normally open relay contacts remain in their closed position, even when power no longer passes through the coil.

"If that type of failure happens prematurely, we may suggest the equipment designers employ a different relay altogether or a different contact material better suited to the load," explained Hannah. "At the start of a project, engineers must determine load, in-rush current, and other characteristics, so they can select the best relay and contact material to ensure a long life."

Engineers also must consider the ramifications of a relay that fails with its contacts closed. After all, you don't want to return from a vacation to find your furnace has run constantly for a week. "Designers must include a fail-safe circuit to ensure a relay failure lets equipment shut down gracefully and in a controlled fashion that does not compromise safety," said Tim Hasenour, product engineering manager for general-purpose relays at Tyco Electronics.

Coils Do the Heavy Lifting

Contacts are good, contacts are impressive, but it is the coil that does the work. (With apologies to Mark Twain.) Current passing through an electromagnetic coil, with a metal core, creates a magnetic field that moves a relay's armature. Depending on the type of relay contacts, this action "breaks" one circuit and "makes" another as would an SPDT switch. Relay specifications include the amount and type (AC or DC) of current and the voltage you must apply to the coil to ensure proper operation.

Sometimes, engineers forget about the coil's current specification. "I have seen customers choose a relay with a 12V DC coil and try to operate it with 1 mA when the coil actually needed 20 mA," noted Mark Boston, product marketing manager for power relays at Omron.

It might seem that a coil is a coil is a coil, but AC and DC coils differ in construction, so you cannot interchange them. "Coils operate on the basis of amp-turns: You push a certain current through a given number of turns and create magnetic field x," explained Leipold of Tyco Electronics. In a DC coil, the wire's resistance limits current, while in an AC coil, the impedance at 60 Hz or 50 Hz plus the coil's DC resistance limits current." An AC coil has an added "shader ring;" usually a copper ring on top of the coil close to the armature. The shader ring maintains a magnetic field strong enough to hold the armature in place when the AC line power passes through zero volts. "Within the same family, a relay with an AC coil will not have as long a life as a relay with a DC coil," noted Leipold. "In some relay families it makes more of a difference than in others."

All relay coils -- AC or DC -- have a pick-up voltage that causes the armature to close the contacts. But the voltage must increase to a nominal operating voltage for the relay to operate properly. Relays also have a drop-out voltage below which the electromagnet can no longer hold the armature in its actuated position. Those voltages depend on the relay's temperature -- another point engineers new to relays may miss. "As a rule of thumb, the resistance of a coil increases by 4 percent for every 10°C increase in ambient temperature," noted Glenn Tarnawa, product support manager at Omron. "As temperature increases, the pick-up and drop-out voltages must increase, too. The nominal voltage remains about the same." So, if you design a coil-driver circuit for room-temperature operation and put the driven

relay in a hotter environment, it may not operate every time.

"In this type of situation, ensure your power supply provides the relay's nominal voltage plus a slight overdrive," said Tarnawa. "But if you overdrive the coil too much, you will heat it and raise its temperature. In any case, you should not exceed the coil's maximum temperature spec."

Engineers might take a shortcut and rectify AC power with a half-wave or full-wave bridge and apply the rectified signal to a DC coil. "But the coil will not operate properly and can miss operations," explained Tarnawa. "We recommend the DC-coil signal should have no more than a 5-percent voltage ripple. An unfiltered rectified AC signal shortens relay life because it changes the effective contact pressure."

"Generally speaking, ratings published in data sheets or in UL or CSA reports assume the given relay coil operates from filtered DC current, unless otherwise specified," cautioned Leipold of Tyco Electronics. "If you drive a coil with unfiltered full-wave- or half-wave-rectified voltages, those ratings do not necessarily apply."

"Designers also might decide to drive a relay coil with a pulse-width-modulated (PWM) signal to save power," explained Tarnawa. "But, a typical off-the-shelf relay with a DC coil isn’t designed for PWM operation. When you need to drive a relay with a PWM signal, then a relay supplier must specifically design one to accommodate the signal."

A relay requires coil current to maintain its armature in its actuated position. That means the relay must consume power when it switches a circuit. To help conserve power, engineers can select a latching relay that holds its armature in the actuated position without the need for coil current. "The coil in a latching relay receive’s a short voltage pulse and latches in the actuated state," explained Magnecraft's O’Donnell. "A redirected voltage pulse or a pulse to a *second* coil unlatches the relay's armature. The coil does not continue to draw power after the voltage pulse ends."

"We also offer a unique impulse-sequencing relay, our 711 model, which requires pulses on only one control line," noted O'Donnell. "It operates like a flip flop. One pulse actuates the relay armature, and a second pulse releases the armature. Again, in between the pulses the coil draws no power."

Protect Your Contacts

"Many of the engineers I talk with know they have a resistive, inductive, or capacitive load," said Tarnawa of Omron. "A motor load, for example, might have a high in-rush current when the relay contacts close and then an inductive-kickback voltage when the contacts open. A surge suppressor could reduce the voltage kickback and prevent it from damaging the relay contacts. In-rush currents are more difficult to control; sometimes you can put a resistor or surge limiter in the circuit to limit the current. And if in-rush current causes relay contacts to tack-weld shut as they close, you might put some sort of fusing element in series with the contacts."

But some engineers take relay contacts for granted. "They think of every load as a resistance and specify a relay based on that characteristic," said Tarnawa. "They then realize they have a 100A in-rush current, so they must look beyond a relay's resistive-load ratings. In this case, they need a higher-power relay."

A number of companies produce special thermistors with a negative temperature coefficient that act to limit in-rush current. A high resistance initially limits current flow through one of these thermistors. The current heats the device and its resistance quickly drops, effectively making it a low-resistance conductor. The thermistor reduces the initial current surge and then lets the normal operating current flow to a load.

When relays switch AC power, engineers can use a zero-crossing technique to help protect relay contacts. In effect, a relay becomes part of a microcontroller- or microprocessor-based circuit that switches power to the load just as the circuit senses the AC voltage crosses through zero volts. The processor used the line-voltage signal to time relay operations.

The zero-crossing technique enhances the performance and lifetime of a relay. "An inductive or capacitive load can pull an in-rush current that amounts to 10 or 15 times the load's steady-state current," explained Leipold of Tyco Electronics. "Your relay can better tolerate that in-rush current when it increases in sync with the line-voltage sine wave. You avoid closing the relay's contacts at a high line voltage. So you can use a smaller relay when you use zero-cross switching."

You also can break a connection to an inductive load just before zero current crossing to reduce arcing and minimize contact erosion, which increases contact lifetime. To help overcome small variations in a relay's switching time, engineers can slightly overdrive the relay coil to ensure it switches at the same speed every time.

Once in a while an engineer may run into trouble by inadvertently synchronizing relay operations to a 60- or 50-Hz line signal. "Say the line signal provides a 'heartbeat' interrupt for software processes that open and close relays," said Leipold. "The software will always activate or deactivate relays at the *same* point on the AC-line voltage sine wave."

When that happens, the polarity of line-voltage signal on the contact always remains the same. "The contacts always transfer metals from contact X to contact Y," noted Hannah of Tyco Electronics. "You end up with a crater on one contact and a build-up of material on the other. That can reduce your contact gap and lead to early contact failures."

Normal unsynchronized switching takes place randomly along the sine wave and causes smaller net transfers of contact metal between the contacts. "You average some 'good' closures near zero volts with some 'bad' closures close to the peak AC-line voltage," explained Leipold. "But if you always close the contacts at, say, a 60° phase angle, that's always bad."

Relay coils also require some protective circuitry, but usually to protect a coil-driver circuit rather than the coil itself. Many engineers place a small-signal reverse-biased diode across the coil to short out current induced by the coil's collapsing magnetic field when coil power turns off. So, instead of sending the coil's energy back to the driver chip or transistor, the coil-diode loop creates a short circuit that dissipates most of the energy. But engineers who employ a diode in this way may not realize that it can slow the relay's drop-out time. In essence, the contacts take longer to open.

"Although a standard diode greatly increases the drop-out time," said Hannah, "the combination of a regular diode in series with a Zener diode does not affect the drop-out time as much. When you have an inductive load, the longer drop-out time can prolong the arcing time as the contacts separate and decrease contact life." In one example, a relay with a diode across its coil took 9.8 msec to drop out. The combination of a Zener diode and a small-signal diode reduced the time to 1.9 msec. Without any diode across its coil, the relay had a 1.5 msec drop-out time. (See: For Further Reading.)

In some cases, you might need to protect a relay coil from power surges or protect a circuit from voltage spikes created by a closing relay coil. "We offer diodes, metal-oxide varistors, and RC circuits as relay add-ons," explained Magnecraft's O'Donnell. "But instead of having engineers manually wire them across the coil terminals, they can just plug the add-on circuit into the relay socket that comes prewired to accept the protection-circuit modules."

Relays Get Smaller

Every designer wants smaller components, and relay manufacturers have responded. But as always, the choice of smaller relay packages involves specification trade offs. "In some cases, smaller relays do not have as long a life as their larger siblings," said Boston of Omron. "We have a new smaller relay that is 2.7 mm shorter than the previous generation type with same 'footprint.' The new relay has a life expectancy of 50,000 operations, whereas the larger relays have life expectancies of 100,000 operations."

"Also, engineers might have to work with a dielectric strength of 4,000V, for example, in the smaller relay rather than 5,000V," noted Boston. "And because mounting dimensions also shrink, so do the creepage and clearance distances, which can affect a design that requires agency approval." If a standard relay coil with a UL Class-F (155°C) insulation rating can operate at a higher maximum ambient temperature, then a smaller equivalent Class F relay may need to operate in a lower temperature environment. So, you trade off a savings in space for the need to keep the ambient temperature lower.

Apply In-Circuit Tests with Care

"Often engineers use an in-circuit tester (ICT) to test relays, particularly those on printed-circuit boards," said Tyco Electronics' Hasenour. "Typically, ICTs use low currents and voltages to perform tests, but those conditions will not 'punch through' any thin oxide films on the relay's contacts. They may detect a failure that does not actually exist and think they have a bad relay. Test engineers must ensure their ICT

equipment can provide a voltage and current across the contacts sufficient to properly test them."

As a rule of thumb for 10A power relays, Hasenour recommends a switched test current of at least 10 mA at between 6V and 12V. "That is not a fixed range, but engineers must know they cannot use normal ICT signals to test relays. But if they must, and they detect a failed relay, they should take it to their bench and run a higher current and voltage through the contacts to provide a solid go/no-go test."

The basic relay design has not changed much since Joseph Henry invented it in 1835, and engineers continue to use "clapper-style" relays in modern electronic equipment. Although Henry would recognize his electromagnet-armature mechanism, he would be amazed by the wide variety of relays available for today's products.

Note: please comment using the form at the bottom of this page.

For Further Reading (note: external links open in new windows)

"Power Relays -- Technical Introduction to Power Relays," Tyco Electronics. http://relays.tycoelectronics.com/schrack/techn/relbook.asp. [1]

"Locked Rotor Code Letters and Reduced Voltage Starting Methods," The Cowren Papers. www.motorsanddrives.com/cowern/motorterms6.html [2].

"Operating DC Relays from AC and Vice-Versa," Application Note 13C3250, Tyco Electronics. www.ciitech.com/appnotes/app_pdfs/13c3250.pdf. [3]

"The application of relay coil suppression with DC relays," Application Note 13C3311, Tyco Electronics. http://relays.tycoelectronics.com/appnotes/app_pdfs/13c3311.pdf. [4]

For a table of relay troubleshooting tips, see Chapter 11, "Relays and Controls," in US Army Training Manual TM5-684, "Facilities Engineering -- Electrical Exterior Facilities." www.usace.army.mil/publications/armytm/tm5-684/chap11.pdf. [5]

Source URL (retrieved on *09/30/2014 - 5:11pm*):
http://www.ecnmag.com/articles/2007/11/power-relays-give-designers-much-ponder

Links:
[1] http://relays.tycoelectronics.com/schrack/techn/relbook.asp.%3C/t1
[2] http://www.motorsanddrives.com/cowern/motorterms6.html
[3] http://www.ciitech.com/appnotes/app_pdfs/13c3250.pdf.%3C/t1
[4] http://relays.tycoelectronics.com/appnotes/app_pdfs/13c3311.pdf.%3C/t1
[5] http://www.usace.army.mil/publications/armytm/tm5-684/chap11.pdf.%3C/t1