8-Bit MCUs Keep Going Strong

Jon Titus, Senior Technical Editor

"Cost still rules applications," said Ross Bannatyne, Marketing Director at Silicon Laboratories, a supplier of 8051-based MCUs. "If 8-bit MCUs solve problems, why use more expensive 32-bit chips?" Newer 8051 derivatives, for example, execute 100 MIPS and on-chip multiply-accumulate accelerators let them handle signal-processing tasks. According to Bannatyne, some engineers might not realize 32-bit MCUs can incur code penalties. "They might assume an algorithm that requires 16 KB in an 8-bit MCU also needs 16 KB in a 32-bit processor. Often the code takes more memory in the 32-bit processor, often much more."

By squeezing more and more circuitry into an 8051 MCU, chip designers have increased what Bannatyne calls functional density. "In a 3 mm × 3 mm package, you have almost everything you need; oscillators, voltage references, watch-dog timers and analog converters." Eight-bit code can easily manage sensors, motors, relays, and displays, which explains why the 8-bit market remains strong: Consumers and OEMs seem to have insatiable appetites for equipment that controls these types of I/O devices.

"Look at capabilities from the perspective of costs," cautioned Norm Sheridan, Chief Technology Officer at Zilog. You can buy an ADC for two or three dollars. But most likely you can find a similar ADC on an 8-bit MCU that sells for $1.50. As long as the MCU and its ADC meet your requirements, it provides a good solution. Not everyone needs a 16- or 20-bit converter.

Communication capabilities also have extended the longevity of 8-bit MCUs. Chips provide UART, SPI, and I^2C ports, as well as CAN and local-interconnect network (LIN) ports. "Engineers also want to communicate with PCs, industrial controllers, or consumer products through USB," noted Bannatyne. "So you see more USB ports in 8-bit MCUs, which enhances their appeal."

"We have USB 2.0, 10Base-T Ethernet, CAN, and display interfaces in 8-bit MCUs," said Terry Schmidt, Marketing Manager for the Advance Microcontroller Architecture Division at Microchip Technology. "Similar capabilities exist on 16- and 32-bit controllers, but you find enhanced USB and Ethernet ports, and more than one CAN port. Those enhancements require software stacks and buffers that take up additional flash and SRAM."

But is Ethernet on an 8-bit MCU an answer in search of a problem? Not according to Norm Sheridan at Zilog. "Customers have chosen the company's eZ80F91 MCUs specifically because they provide an Ethernet MAC. Equipment from vending machines to security cameras can plug into an existing network and send information to a central point."

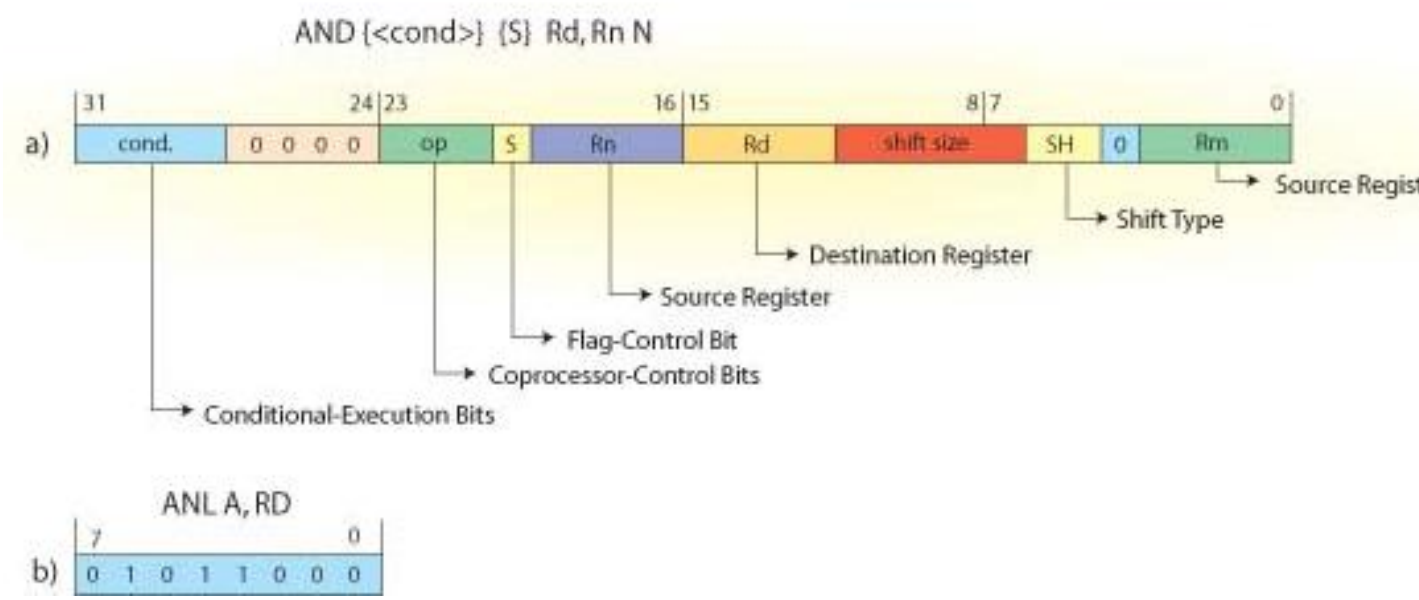

"When customers need to add Ethernet to a product, they can upgrade to a different processor within our families and take advantage of our software libraries," explained Microchip's Schmidt. Engineers also can add an Ethernet, CAN or USB port easily to an existing design without much work. Instead of going through a complete redesign, they drop in an inexpensive 8-bit MCU that provides the needed communication capabilities and connects to a host processor through an SPI or I^2C port.

New applications for 8-bit MCUs appear daily. In a TV set, for example, a 40-cent Freescale MCU replaced discrete components that controlled on-off operation, standby power, and the standby LED. "MCUs also go into small appliances that include a grayscale LCD," said Eddie Sinnott, Microcontroller Product Manager for Freescale's Consumer and Industrial Operation. "We can use software to implement a capacitive touch sensor that lets an MCU detect proximity, sense fuel levels, and perform other tasks that a mechanical device used to handle."

Freescale recently expanded its 8-bit MCUs to provide 128 KB of flash that engineers can address linearly. The extra memory lets customers adopt ZigBee, for example, which can require a 50-kbyte stack.

Engineers aim to extract as much performance as possible from the MCUs they already use. So, as suppliers enhance the capabilities of an older architecture, customers will stay with it as long as they can. Ramtron recently added 8 KB of nonvolatile ferroelectric random-access memory (FRAM) to its Versa 8051 MCUs. Unlike flash memory, nonvolatile FRAM does not exhibit any "wear" characteristics. Future MCUs will provide from 2 KB to 32 KB of FRAM. (Versa 8051 chips also include flash memory.)

"Customers ask about FRAM when they need to store data," said Mike Alwais, Vice

President of Marketing at Ramtron. "They can control peripherals and gather data with a high-performance 8051 MCU, and on-chip DSP functions also let them process data before they save it."

After adding FRAM to an enhanced 8051 core, what comes next? "The original architecture provides for 64 KB of flash memory, so we will look at ways to extend memory beyond that limit," said Alwais. "We also may look at ways to reduce power consumption, which would let engineers use the 8051 MCUs in more sensor-based or battery-powered products."

Battery power plays a large role in many embedded systems. "When you have cable-TV or Internet service, you could have a control box that must remain powered at all times," explained Norm Sheridan of Zilog. "So, when main power goes out, batteries power the electronics for four to five hours. Several customers use our Z8 Encore! XP MCUs to control battery charging and maintenance. We have algorithms that let engineers top-up batteries with the last few Joules."

"Many of our 8-bit MCUs include integrated oscillators with fail-safe controls, power sequencers, a power-on reset, and a brown-out and a low-voltage detector," noted Microchip's Schmidt. "That makes these MCUs a good fit in battery-powered circuits. Many 32-bit processors do not include those functions."

Source URL (retrieved on *05/24/2013 - 1:22am*):
http://www.ecnmag.com/articles/2007/08/8-bit-mcus-keep-going-strong?qt-recent_content=0