Gear Up for Motor Choices

Mike Lefebvre, AMETEK Technical & Industrial Products

This article orininally appeared in the May 15, 2007 issue of ECN Magazine.

Engineers can choose from an array of electric motors, although most electronic-industry applications rely on permanent magnet brush-commutated DC motors, brushless DC motors and hybrid stepper motors. Insight into motor characteristics will help select the proper motor for an application.

Conventional brush-commutated DC motors use "brushes" - typically solid graphite with some metal content. The motor’s rotor includes a commutator that contains metal bars that connect with each coil. As the rotor turns, the brushes transfer current to the commutator which switches current from one set of windings to another. Brushless DC motors rely on commutation produced through the combination of a shaft-position sensor and external switching circuits.

Hybrid stepper motors, also called hybrid steppers, combine the operating principles of permanent-magnet and variable-reluctance stepper motors. One or more pairs of laminated stacks that feature many sets of teeth along the outside perimeter are positioned on the rotor shaft. A permanent magnet between each stack within a pair creates a north and south pole along the axis. The number of teeth, motor construction and type of drive scheme determine a motor’s step angle. Most applications specify hybrid steppers with a step of 1.8°, or 200 steps per revolution. (See: For further reading [1].)

Compare Motor Characteristics

To help narrow your choice of motor types, start with the key characteristics explained below:

- Type of Load. Brush and brushless DC motors can accommodate a wide range of loads - constant, variable, high intermittent peak or unpredictable. Hybrid stepper motors generally do not tolerate overload conditions, and high peak loads can cause missed steps or stalls. Specify a hybrid stepper only when you anticipate nearly constant or predictable torque loads.

- Physical Size and Power Density. In brush DC motors, high thermal impedances due to location of windings on the armature, or rotor, diminish heat dissipation. Thus, a given application may need a larger brush DC motor to provide the required torque and to better dissipate heat. Windings located in the stator in a brushless DC motor offer a lower impedance path for heat, so compared with a brush DC motor, a smaller brushless DC motor could work just as well. But, the drive electronics for a brushless DC motor add cost and may require extra space.

  Even though hybrid steppers provide low thermal-impedance paths similar to those in brushless DC motors, you must specify hybrid steppers for "worst-case" peak torque. That need may demand a relatively large motor package. But because hybrid steppers deliver high torque at low speed, they can eliminate gearboxes and often fit in smaller spaces.

- Case Heating. For a given motor size and torque load, brushless DC motors tend to run at lower internal temperatures than the other two motor types. And the case temperature for brushless DC motors often corresponds closely to the temperature of the motor’s windings. Steady-state case temperatures for brush DC motors are often much less than the winding temperature due to high internal thermal impedance. (But that means rotors can run hot.) Hybrid steppers almost always run hot. Designers should always protect people from contact with hot motors.

- Typical Speeds. Brush DC motors generally operate between 1,000 and 10,000 rpm. Lower speeds cause brush particles to accumulate in slots between commutator segments and cause shorts. Inherent brush-commutator mechanics limit maximum speed to about 10,000 rpm. If you need a speed below 1,000 rpm, use a gearbox to reduce rotation rate.

  The mechanical integrity of rotors, speed-related internal losses and bearing

characteristics limit the speeds of brushless DC motors, but speeds can reach or exceed 10,000 rpm. You can obtain brushless DC motor speeds below 1,000 rpm by using a gearbox or directly from a motor, depending on its drive capability.

Select a hybrid stepper when you need speeds below 1,000 rpm and high torque at low speeds. Keep in mind that hybrid steppers can operate across a wide range of speeds that depend on how fast control pulses drive their windings. Torque begins to drop off quickly at higher speeds, although use of low-impedance windings may slightly increase the speed at which torque starts to decrease.

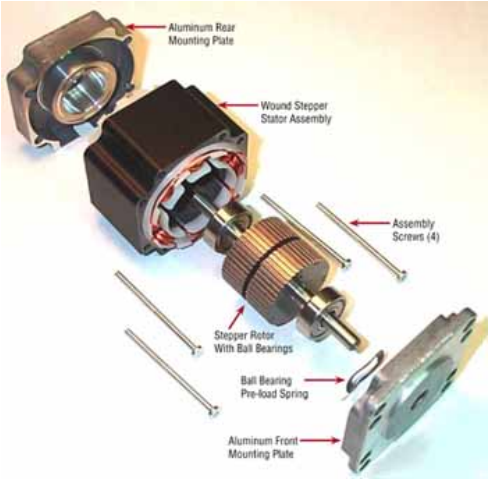

- Efficiency. Mechanical resistances caused by gearboxes and brushes can lower the efficiency of brush DC motors. Manufacturers can use iron-less (non-ferrous) motor construction and precious metal brushes to decrease mechanical resistance. But, non-ferrous motors often yield lower power densities than iron-core motors, and precious-metal brushes usually have shorter lives and lower current capacities than metal graphite brushes.

  Hybrid steppers provide the lowest efficiency among these motor types because they continuously draw current. Gearboxes and drive electronics also decrease efficiency in brushless DC motors, although slotless construction techniques can help compensate by reducing cogging, hysteresis and viscous losses. Viscous losses - internal to a motor - depend on speed. Parasitic effects such as eddy currents (electrical currents induced in the back-iron by the changing magnetic field) and hysteresis (resistance of the back-iron to changing magnetic fields) cause a significant portion of these losses. Both types of loss manifest themselves as unwanted heat. Motor manufacturers minimize these losses by adopting slotless construction that uses less back iron and places it farther from the rotor’s magnetic field.

- Holding Torque. In a brushed or brushless DC motor, holding torque depends on an unenergized motor’s cogging and friction torque which usually are

low. (Cogging refers to a motor's resistance to movement due to internal magnetic forces.) You can use a gear reducer to increase the holding torque a motor presents to a load, or you can install a brake on the shaft.

The holding power of a hybrid stepper motor depends on its detent torque which is usually low. Detent torque holds an unpowered stepper motor's shaft in position due to the inherent magnetic force of permanent magnets in the stepper. But because a hybrid stepper will operate continuously at full current, it can produce a high holding torque as long as you power it.

- Position Loss. Brush and brushless DC motors used in positioning applications exhibit low susceptibility to position loss because they generally operate with feedback devices in a closed loop. Hybrid steppers usually operate in an open loop so a system can lose track of a shaft's position. An added rotary encoder can provide absolute or incremental position information.

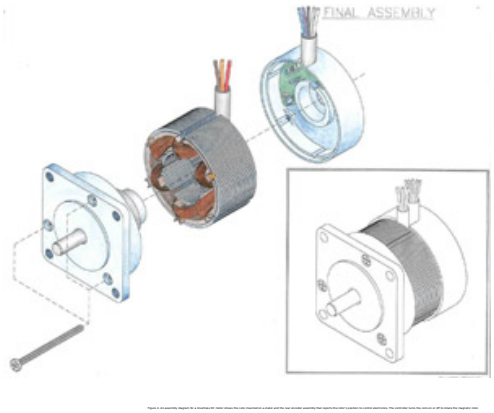

- Audible Noise. Noise arises from several sources in brush and brushless DC motors, and noise increases when you use a gearbox. Rotor balancing and proper selection of bearing and brush materials during the assembly of a motor help reduce noise. Application engineers at a motor manufacturer can help you choose a motor with characteristics that reduce noise. Noise in hybrid steppers comes from bearings and from vibration caused by resonances. Avoid operating a hybrid stepper at speeds that cause resonances or instabilities, and use an alternate drive scheme, such as microstepping, to reduce noise.

- Electrical Noise. The mechanical commutation system in brush DC motors generates more electrical noise than do brushless DC and hybrid stepper motors. You can add noise-suppression devices and filters and ask motor vendors to help you choose brush materials that attenuate noise.

- Life Expectancy. In general, brushless-DC and hybrid-stepper motors can operate for more than 10,000 hours. Bearing life and related radial and axial loads, temperature and environment contribute the life-limiting factors. The

long life of these motor types offers one of their biggest advantages. The life of brushes, bearings and gearboxes used with brush DC motors limits the longevity of this type of motor to between 2,000 to 5,000 hours. Actual service life depends on motor design, operating current, voltage, speed and so on.

I recommend you select a motor type and then work with one or two motor suppliers who can share their engineering experience with you. Application engineers can guide you to a motor that fully meets your design requirements.

For further reading . . .
"Stepper Motor Basics," Solarbotics, Ltd.
www.solarbotics.net/library/pdflib/pdf/motorbas.pdf [1]

———

Mike Lefebvre works as a motors engineering manager at AMETEK Technical & Industrial Products. He earned a BS degree in mechanical engineering from Lehigh University and an MBA degree from Pennsylvania State University.
E-mail: mike.lefebvre@ametek.com [2].

Source URL (retrieved on *12/08/2013 - 2:54pm*):
http://www.ecnmag.com/articles/2007/05/gear-motor-choices?qt-video_of_the_day=0

Links:
[1] http://www.solarbotics.net/library/pdflib/pdf/motorbas.pdf
[2] mailto:mike.lefebvre@ametek.com